CINEC CAMPUS
Beyond A Graduate

PAST PAPERS

Faculty	Department / Section/Division
Not Applicable	Learning Resource Centre

Past Papers

Faculty of Humanities & social Sciences
Department of Logistics & Transportation

Bsc.in International Transportation Management and Logistics Transportation (Year 2 – Semester II)

2016-2022

library

CINEC Campus, Sri Lanka
NOT TO BE TAKEN AWAY WITHOUT PROPER AUTHORIZATION
Learning Recourse Centre - (Library)

CINEC CAMPUS
Beyond A Graduate

Faculty of Management and Social Sciences
Department of Logistics & Transport
BSc in International Transportation Management and Logistics
Course CODE: COM550

Year 2 Semester II

SEMESTER END EXAMINATION

Maritime Law – MLAW0331

- This paper consists of EIGHT questions on TWO (02) pages.
- Answer FIVE Questions including Question 01.
- Only non-programmable calculators are allowed.
- You may use appropriate graphs, diagrams, equation/s to prove or justify the answers.
- If you have any doubt as to the interpretation of the wording of a question, make your own decision, but clearly state it on the script.
- Write legibly

Date: 2022.09.25 Pass mark: 50% Time: 03 Hours

Question-1:

What do you understand by the term FON and Innocent Passage in relation to Maritime Transportation? (20 marks)

Question-2:

As described under SCGA, list down 15 explained statements to each of the following:

a. Seaworthiness
b. Cargo-worthiness (20 marks)

Question-3:

Write about a Switch B/L? (20 marks)

Question-4:

Discuss between regular Paper B/Ls vs Electronic B/Ls (20 marks)

Question-5:

Discuss differences and responsibilities amongst between the following:

- Ship owner
- disponent owner
- ship-management
- ship operator
- charter.

(20 marks)

Question-6:

Salvage:

(a) What do you understand by the term "Salvage" in relation the maritime transportation environment"?
(10 marks)

(b) What are the three conditions which must be fulfilled before the research of maritime property can give rise to a valid claim for a salvage award?
(10 marks)

Question-7:

Discuss to basic concept of marine losses in the aspect of marine insurance.
(20 marks)

Question-8:

Discuss about the standard salvage agreement, its advantages and disadvantages.
(20 marks)

----------*END OF THE QUESTION PAPER*----------

Library. 20-15

00018

CINEC CAMPUS
Beyond A Graduate

Learning Resources

Faculty of Management and Social Sciences
Department of Logistics & Transport
BSc in International Transportation Management and Logistics
Course CODE: COM550

Year 2 Semester II

SEMESTER END EXAMINATION

Shipping Management – SPMG0306

- This paper consists of EIGHT questions on FOUR (04) pages.
- Answer FIVE Questions including Question 01.
- Only non-programmable calculators are allowed.
- You may use appropriate graphs, diagrams, equation/s to prove or justify the answers.
- If you have any doubt as to the interpretation of the wording of a question, make your own decision, but clearly state it on the script.
- Write legibly

Date: 2022.09.22 Pass mark: 50% Time: 03 Hours

Question 01 (Compulsory)

When one party (a 'Principal') cannot participate to contract with a third party involving the ship, another party may be appointed as the representative. This commences an 'Agency' relationship, with obligations and rights that are recognized by others in the shipping business and maritime industry.

(a) The principal-agent relationship inflicts several duties upon the agent because of the contractual nature of the relationship.

(i) Who is a ship agent? (01 Marks)

(ii) Write down four duties of a ship agent. (04 Marks)

(iii) Sea-port operations are affected by a vast area of geopolitical, economic & technological developments. Also, changes in global production & international trade affect port activity levels & operations. The demand for

port traffic is decided by world trade. What is the economic term used to express this nature of shipping? (01 Marks)

(b) A legal document called "X" is issued by the carrier to the shipper when shipping goods internationally, and it is an essential element of the process. It is used as proof of shipment. This is particularly important for use in the customs process, insurance, and financial instruments. It is also used as commercial proof to show agreements have been fulfilled.

(i) What is "X"? (01 Marks)
(ii) What are the main three functions of this document? (03 Marks)
(iii) Give five facts indicating as content information in this specific document. (10 Marks)

Question 02

A CFS is also a place where goods for import and export are stored temporarily. It is an extension of a port or terminal and was conceived with the objective of clearing congestion at India's ports and terminals. Elaborate the concept of CFS & its functions in a broad view. (20 Marks)

Question 03

Documentary credits (Ex. Letter of Credit) are controlled by an international code of practice drawn up by the International Chamber of Commerce, known as UCP. These rules were adopted to relieve the difference between national and regional rules on documentary credit practice.

(a) UCP had been revised six times in the history so far.

(i) What does mean by the short form UCP? (01 Marks)
(ii) How many articles are there in UCP 600? (01 Marks)
(iii) Name three major parties involved in documentary credit transactions. (03 Marks)

Library, 20-15.

00018

CINEC Campus, Sri Lanka
NOT TO BE TAKEN AWAY WITHOUT PROPER AUTHORIZATION
Learning Recourse Centre - (Library)

CINEC CAMPUS
Beyond A Graduate

Faculty of Management and Social Sciences
Department of Logistics & Transport
BSc in International Transportation Management and Logistics
Course CODE: COM550

Year 2 Semester II

SEMESTER END EXAMINATION

Transport Economics – ECON0319

- This paper consists of EIGHT questions on SIX (06) pages.
- Answer FIVE (05) Questions including Question 01.
- Only non-programmable calculators are allowed.
- You may use appropriate graphs, diagrams, equation/s to prove or justify the answers.
- If you have any doubt as to the interpretation of the wording of a question, make your own decision, but clearly state it on the script.
- Write legibly

Date: 2022.09.17 Pass mark: 50% Time: 03 Hours

Question 01 (Compulsory)

Select the most suitable answer.

1. The difference between price what you have to pay for a product/ service and utility what you subjectively feel is arise,
   (a) Dissatisfaction
   (b) Bargain
   (c) Argument
   (d) Misunderstanding

2. Demand for transport and logistics services has
   (a) Direct demand
   (b) Unlimited demand
   (c) Derived demand
   (d) Effective demand.

3. Demand for Cruise ships by tourist have

(a) Direct demand
(b) Derived demand
(c) Indirect demand
(d) Effective demand.

4. Supply of transport is consisted with,

(a) Frequency
(b) Coverage
(c) Infrastructures
(d) All of above

5. Generalize price of a transport mode is not included,

(a) Monetary cost
(b) Time cost
(c) Security cost
(d) Externalities

By taking an airplane person X can travel from A to B in one hour. The same trip takes 5 hours by bus. Airfare is $ 90 and the bus fare is $ 20. When person X not travelling, can work and earn $ 30 per hour. Answer question 6 and 7

6. The implicit cost for person X of travelling by bus,

(a) $ 30
(b) $150
(c) $100
(d) $120

(b) UCP 600 play a vital role in international trade today.

(i) Summarize the importance of UCP 600 in shipping industry. (05 Marks)

(ii) Explain any four articles of UCP 600. (10 Marks)

Question 04

Dangerous cargo must be handled with severe care and consideration of its dangerous nature. Any mis-declaration, mis-communication or incorrect documentation might cause severe consequences and could prove disastrous to human lives on shore or on a ship. Illustrate dangerous cargo handling precautions including a proper definition for them. (20 Marks)

Question 05

Draw down a structure of a typical documentary Letter of Credit transaction & explain the steps in an order. (20 Marks)

Question 06

Note of Protest is a notarized statement & its purpose is to protect the ship's charterer or owner from liability for damage to the cargo, the ship or to other ships in a collision, where this was caused by the perils of the sea (for example, bad weather). Provide a lengthy discussion on note of protest while highlighting when the note of protest is applicable. (20 Marks)

Question 07

Renting a ship is called as ship chartering and it begins with the shipowner and a second party entering into an agreement. Discuss the three main chartering types separately. (20 Marks)

Faculty of Management and Social Sciences
Department of Logistics & Transport
BSc in International Transportation Management and Logistics
Course CODE: COM550

Question 08

Shipping industry has a different vocabulary set which are used to express or name different conditions, scenarios, intermediaries and shipping related employees. Write down short notes for four preferred topics from the below. (Use suitable diagrams when necessary). (4*5 Marks)

(a) Ship Manifest

(b) Free Pratique

(c) Letter of Credit

(d) Pilotage

(e) Maritime Piracy

(f) Break-bulk cargo

(g) Received for shipment bill of lading & shipped bill of lading

(h) Load Line Certificate

----------END OF THE QUESTION PAPER----------

7. Which one of following is incorrected,
   (a) The implicit cost of travelling bus is greater than airplane.
   (b) The opportunity cost of travelling bus is more than airplane.
   (c) Travel by airplane is the best option
   (d) None of above.

Table 1.1: Elasticity co-efficient of Car Traffic.

	Short run	Long run
Car traffic with respect to price	-0.16	-0.43
Car traffic with respect to petrol price	-1.02	-0.36
Car traffic with respect to Per Capita GDP	+0.75	+1.5
Car traffic with respect to public bus ticket price	+0.5	+1.02

Answer Questions 8,9 and 10 using above Table1.1

8. The Car is,
   (a) A normal service for the consumer
   (b) An Inferior service for the customer
   (c) A merit services
   (d) A demerit services

9. The cross-price elasticity between car traffic and public bus shows that,
   (a) Weak complement relationship in short run
   (b) Strong substitute relationship in short run
   (c) Close substitute relationship in long run.
   (d) None of above.

10. Which one is incorrect statement,
   (a) Car traffic is more sensitive for price than income of passengers in short run.
   (b) Car traffic is more sensitive for income than price of bus ticket in short run.
   (c) Car traffic is more sensitive for price in long run than short run.
   (d) Car traffic is more sensitive for income than bus ticket price in long run.

CINEC CAMPUS
Beyond A Graduate

Faculty of Management and Social Sciences
Department of Logistics & Transport
BSc in International Transportation Management and Logistics
Course CODE: COM550

(20 Marks)

Question 02

(a) Explain that how does the transport and logistics services influence on the functions of economic activities. (10 Marks)

(b) Explain that initiatives, strategies taken by different types of transport related social and economic infrastructures (Road infrastructure, road passenger, rail, air and port sector) in year 2021. (10 Marks)

Question 03

(a) Explain the determinants of travel demand for airline industry. (10 Marks)

(b) "The elasticity of travel demand is an important concept in strategic decision-making process in the transport market" do you agree? Explain. (10 Marks)

Question 04

(a) What do you mean by excess supply? illustrate with diagram and explain the reasons for excess supply in the transport field (07 Marks)

(b) What do mean by elasticity of transport supply? Explain that factors which are determine the elasticity of supply with examples. (07 Marks)

(c) Explain the behavior of shipping supply curve. (06 Marks)

Faculty of Management and Social Sciences
Department of Logistics & Transport
BSc in International Transportation Management and Logistics
Course CODE: COM550

Question 05

Price discrimination is the term used to describe a pricing policy in the transport industry, then explain that,

a) Briefly explain types of price discriminations (06 Marks)
b) What are the market conditions required for price discrimination? (06 Marks)
c) What are the advantages and disadvantages of price discrimination (04 marks)
d) Is price discrimination depending on relative elasticity of the services? (Explain with an appropriate diagram.) (04 Marks)

Question 06

In transport economy it can be seen negative externalities and positive externalities. The government intervenes to control and promote those externalities through their economic policies. Justify your answer with appropriate examples and diagrams.

(20 Marks)

Question 07

Shipping economics is the study of the structure and interaction of shipping markets and the behavior of the stakeholders within these markets and study of this subject provides macroeconomic understanding of how commodities are transported by sea in most economical way as it is responsible for approximately 80% of the world trade. The shipping supply as well as shipping demand are complicated phenomenon, and its derived demand nature makes the pricing of liner shipping volatile.

(a) How shipping lines address the volatility nature in pricing? (05 Marks)

(b) Explain how shipping lines minimize the impact of constant changes in external trading and business environment though applying various surcharges.

(15 Marks)

Question 08

Write short notes on any four (4) of the followings.

(a) Factors of Production in transport market

(b) Cost classification in airline industry

(c) Cost classification in railway

(d) Cost classification in road transportation

(e) Public Private Partnership Program in Sri Lanka

(20 Marks)

----------END OF THE QUESTION PAPER----------

Library

CINEC CAMPUS
Beyond A Graduate

CINEC Learning Recourse Ce... AL

Faculty of Management and Social Sciences
Department of Logistics & Transport
BSc in International Transportation Management and Logistics*
Course CODE: COM550

Year 2 Semester II

SEMESTER END EXAMINATION

Air Cargo and Passenger Transport – ACPT0305

- This paper consists of EIGHT questions on FOUR (04) pages.
- Answer FIVE Questions including Question 01.
- Only non-programmable calculators are allowed.
- You may use appropriate graphs, diagrams, equation/s to prove or justify the answers.
- If you have any doubt as to the interpretation of the wording of a question, make your own decision, but clearly state it on the script.
- Write legibly

Date: 2022.09.14 Pass mark: 50% Time: 03 Hours

Question 01 (Compulsory)

(a) Compare All cargo carriers and Belly cargo carriers under the following categories:
- Cost of service
- Dimensions and type of cargo
- Flight schedules and network (09 Marks)

(b) Ascent Logistics Pvt. Ltd. is going to ship some cargo from Colombo to Manila, Italy. The shipment consists of 04 boxes, each weighing 21 kg, and each measuring 11 x 21 x 31 inches. Find the chargeable weight. (05 Marks)

(c) Explain general commodity rate, Specific commodity rate and Classification Commodity rate with examples. (06 Marks)

Question 02

(a) Most of the major airlines today have codeshare agreements with other airlines. The main motivation of codeshare agreements is to boost business for airlines by increasing the number of flights that passengers have access to. Explain how codeshare agreements work with an example. (08 Marks)

(b) SriLankan airlines is a member of the prestigious Oneworld global airline alliance. List down the advantages of alliances taking SriLankan airlines as an example. (04 Marks)

(c) Aviation's global economic impact is estimated at $2.7 trillion, equivalent to 3.6% of world gross domestic product (GDP). Its contribution includes direct, indirect, induced and tourism catalytic impacts. Briefly explain these impacts with examples. (08 Marks)

Question 03

(a) Explain each of the following with an example.

i. Hazard
ii. Consequence of a hazard
iii. Safety Risk (10 Marks)

(b) Safety management is a core business function of air transport that must be delivered through a dedicated management system. Explain initiatives taken by airlines for safety management to balance protection and production goals. (10 Marks)

Question 04

(a) Explain characteristics of air cargo with examples. (05 Marks)

(b) ULDs are expensive assets that are considered as aircraft parts. List advantages of ULDs. (05 Marks)

(c) The Covid-19 pandemic has had a significant impact on the air transportation industry. Identify measures adopted by the aviation industry in response to Covid-19. (10 Marks)

Question 05

(a) Explain the weight buildup of an aircraft with the aid of a diagram. (05 Marks)

(b) The six basic flight instruments in the cockpit are categorized into two as pitot-static instruments and gyroscopic instruments. Briefly explain 1(one) instrument from each category. (06 Marks)

(c) Explain the 3(three) axis of rotation of an aircraft (09 Marks)

Question 06

(a) An Air Service Agreement (ASA) is to be signed between New Zealand and China. Newzea Airways is an airline whose home state is New Zealand. Identify which freedom of air is given by each example. (06 Marks)

I.	A flight from New Zealand to China, flown by Newzea Airways	
II.	A flight between China and Russia, flown by Newzea Airways without operating to New Zealand.	
III.	A flight between Shanghai (China) and Beijing (China), flown by Newzea Airways.	
IV.	A flight from New Zealand to China and from China to Russia, flown by Newzea Airways.	
V.	A flight from Australia to China, through New Zealand flown by Newzea Airways.	
VI.	A flight from New Zealand to Shanghai (China) and from Shanghai (China) to Beijing (China), flown by Newzea Airways.	

(b) Briefly explain the Chicago Convention. (05 Marks)

(c) Describe the advantages and disadvantages of adopting an open skies policy for air transportation in Sri Lanka. (09 Marks)

Question 07

Skyway airline is a major airline of Australia. The table depicts the passenger movements of the airline performed by the B777 aircraft of the airline with a seat capacity of 310 seats. Airline operates two flights daily to KUL originating from MEL.

Note: Consider a calendar month as 31 days

CINEC CAMPUS
Beyond A Graduate

Faculty of Management and Social Sciences
Department of Logistics & Transport
BSc in International Transportation Management and Logistics
Course CODE: COM550

Sector length	MEL-KUL (4500 Km)	
Sector	MEL-KUL	KUL-MEL
	Passengers	Passengers
APR	10200	10200
MAY	12200	10020
JUN	11200	10520
JUL	10200	11050
AUG	12000	10020

(a) What will be the ASK by Skyway airline in MEL-KUL for the month of **August** for **round trips**? (04 Marks)

(b) What will be the RPK by Skyway airline in MEL-KUL for the month of **August** for **round trips**? (04 Marks)

(c) What will be the passenger load factor by Skyway airline in MEL-KUL for the month of **August** for **round trips**? (03 Marks)

(d) Explain why a high load factor and high yield are not ideal indicators of an airlines success and profitability. (09 Marks)

Question 08

(a) Identify reasons for ratification of the Montreal Convention. (04 Marks)

(b) Explain the air passenger rights applicable in the event of a flight delay, flight cancellation, denied boarding, delayed, lost or damaged baggage in the context of EC Regulation 261. (08 Marks)

(c) Explain the change in civil aviation management that occurred when the state functions were transferred into public corporations or limited liability companies with the use of a diagram. (08 Marks)

----------END OF THE QUESTION PAPER----------

Library

00018

CINEC CAMPUS
Beyond A Graduate

CINEC Campus, Sri Lanka
NOT TO BE TAKEN AWAY WITHOUT PROPER AUTHORIZATION
Learning Recourse Centre - (Library)

Faculty of Management and Social Sciences
Department of Logistics & Transport
BSc in International Transportation Management and Logistics
Course CODE: COM550

Year 2 Semester II

SEMESTER END EXAMINATION

Port Management – PORT0352

- This paper consists of EIGHT questions on TWO (02) pages.
- Answer FIVE Questions including Question 01.
- Only non-programmable calculators are allowed.
- You may use appropriate graphs, diagrams, equation/s to prove or justify the answers.
- If you have any doubt as to the interpretation of the wording of a question, make your own decision, but clearly state it on the script.
- Write legibly

Date: 2022.09.12 Pass mark: 50% Time: 03 Hours

Question 01 (Compulsory)

a) Explain what is a Sea Port on your own words? (10 Marks)
b) What are the activities involved in Ship Turnaround Time (Ship Time in Port) (5 Marks)
c) What is Service Marketing Triangle? (5 Marks)

Question 02

a) What are the Powers of SLPA as per the SLPA Act? (10 Marks)
b) Explain how Sri Lanka Ports Authority was formed? (5 Marks)
c) What are the Objectives & Duties of SLPA? (5 Marks)

Question 03

a) Who are the port customers & list out their expectations (10 Marks)
b) Name commercial ports in Sri Lanka? (5 Marks)
c) What are the salient facilities of the Port of Colombo? (5 Marks)

Question 04

a) What are the salient features of the Port of Galle? (5 Marks)
b) What are the salient features of the Port of Trincomalee? (5 Marks)
c) "Port is known as Heart of the Nation" Explain Why? (5 Marks)
d) List Navigational Facilities? (5 Marks)

CINEC CAMPUS
Beyond A Graduate

Faculty of Management and Social Sciences
Department of Logistics & Transport
BSc in International Transportation Management and Logistics
Course CODE: COM550

Question 05

a) List out Logistics Division Functions? (5 Marks)
b) Why measure business performance? (5 Marks)
c) Describe types of performance measures? (10 Marks)

Question 06

a) What are the Navigational Charges (5 Marks)
b) Name main Tariff items in the SLPA Tariff 2022? (5 Marks)
c) Describe Colombo Port Expansion Project (Colombo South Harbour) & salient features? (10 Marks)

Question 07

Consider the Hambanthota port and answer the following questions

a) Explain the Port Management? (5 Marks)
b) What are the Navigational Facilities? (5 Marks)
c) What are the Cargo Handling Facilities? (5 Marks)
d) List out Tank Farm (Liquid Bulk Handling) Facilities? (5 Marks)

Question 08

a) Name port related Value-added Logistic services? (10 Marks)
b) What is Port Marketing and list out marketing tools to promote the port? (10 Marks)

----------END OF THE QUESTION PAPER----------

Library

00018

CINEC CAMPUS
Beyond A Graduate

Faculty of Management and Social Sciences
Department of Logistics & Transport
BSc in International Transportation Management and Logistics
Course CODE: COM550

Year 2 Semester II

SEMESTER END EXAMINATION

Inventory and Warehouse Management – IWMG0348

- This paper consists of EIGHT questions on ELEVEN (11) pages.
- Answer FIVE Questions including Question 01.
- Only non-programmable calculators are allowed.
- You may use appropriate graphs, diagrams, equation/s to prove or justify the answers.
- If you have any doubt as to the interpretation of the wording of a question, make your own decision, but clearly state it on the script.
- Write legibly
- Required statistical tables are attached.

Date: 2022.09.20 Pass mark: 50% Time: 03 Hours

Question 01: (Compulsory)

SELECT MOST APPROPRIATE ANSWER OUT OF THE GIVEN CHOICES.

1. Traditional global trends in competition based on;
   (a) Quality, Cost, Organization Vs Organization
   (b) Quality, Flexibility, Responsiveness
   (c) Quality, Cost, Supply Chain Vs Supply Chain
   (d) Quality, Cost, Responsiveness

2. Inventory is;
   (a) Moving goods and material held available by a business to meet future demand
   (b) A collection or stock of goods and material held available by a business to meet future demand

(c) A collection or stock of goods and material held available by a business to meet its goals

(d) Moving goods and material held available by a business to meet its goals

3. Independent demand items

(a) are the items which are used to produce a finished product

(b) demand is dependent upon the demand for some other item in the inventory

(c) are the Items which are shipped as end items to customers

(d) demand is certain and can be derived

4. Composition of the Inventory

(a) Material, Work in-progress, Finished goods, Supplies

(b) Raw material, Work in-progress, Maintenance, Supplies

(c) Raw material, Repair, Finished goods, Supplies

(d) Raw material, Work in-progress, Finished goods, Supplies

5. Reorder point is

(a) the quantity on hand when items to be reordered

(b) the quantity on hand when items dropped

(c) the odder quantity when items to be reordered

(d) the order quantity when items dropped

6. Why the inventory should be hold?

(a) To meet the variations in demand

(b) Because low demand items need to be held in inventory

(c) To meet the demand

(d) Because low demand items need not to be held in inventory

7. Classifications of Inventory

(a) ABC, VED, SDC

(b) ABC, VED, SDE

(c) ABD, VED, SDC

(d) ABC, VEC, SDC

8. Assumption of EOQ model

(a) Only few products involved

(b) Annual demand requirements unknown

(c) Annual demand requirements known

(d) Lead time is varied

9. Minimum Total Cost is the point that

(a) The total cost curve reaches its minimum where the total and ordering costs are equal.

(b) The total cost curve reaches its minimum where the carrying and ordering costs are equal.

(c) The total cost curve reaches its minimum where the carrying and total costs are equal.

(d) The total cost curve reaches its minimum where the carrying and setup costs are equal.

10. Fixed Order Interval
    (a) Not require only periodic checks of inventory levels
    (b) May require continuous and periodic checks of inventory levels
    (c) May require only continuous checks of inventory levels
    (d) May require only periodic checks of inventory levels

11. In what form does warehouses store products in the facilities?
    (a) Raw Material
    (b) Work in Progresses/ Semi finished products
    (c) Finished Products.
    (d) All of the above.

12. What's NOT a warehouse operating principle?
    (a) Stock location
    (b) Physical control and security
    (c) Single story facility
    (d) Order picking and assembly.

13. What are the two major categories that warehouses can be classified into?
    (a) Public and private.
    (b) Contract and multi-client.

(c) Ownership and Operations

(d) Consolidation and break-bulk.

14. What's NOT an objective of a warehouse?

(a) Providing a timely customer service.

(b) Providing communication links.

(c) To keep track of items.

(d) To share the storage space.

15. How does warehousing allows firms to use customer service as a value adding competitive tool?

(a) Through storing.

(b) Through short haul transportation.

(c) Through time and place utility.

(d) Through providing communicational links.

16. What's a cost based benefit of warehousing.

(a) Postponement.

(b) Spot stocking.

(c) Full line stocking.

(d) Production support.

17. What's the material handling equipment which is utilized for both horizontal and vertical movements?

(a) Tow tractor.

(b) Power Pallet truck.

(c) Pallet stacker.

(d) Hand pallet truck

18. Not a difference between contract and Public warehouses.
    (a) Difference in contract.
    (b) Difference in space availability.
    (c) Difference in space availability.
    (d) Difference in ownership.

19. What's the type of warehouse which comes under operations?
    (a) Fulfillment centers.
    (b) Public warehouses.
    (c) Private warehouses.
    (d) Multi-client warehouses.

20. What's not a basic function of a warehouse?
    (a) Transport Consolidation.
    (b) Product mixing.
    (c) Docking.
    (d) Break bulk

(20 Marks)

CINEC CAMPUS
Beyond A Graduate

Faculty of Management and Social Sciences
Department of Logistics & Transport
BSc in International Transportation Management and Logistics
Course CODE: COM550

Question 02

(a) A large law firm uses an average of 40 boxes of copier paper a day. The firm operates 260 days a year. Storage and handling costs for the paper are $30 a year per box, and it costs approximately $60 to order and receive a shipment of paper.

i. What order size would minimize the sum of annual ordering and carrying costs? (02 Marks)

ii. Compute the total annual cost using your order size from part i. (03 Marks)

iii. The office manager is currently using an order size of 200 boxes. The partners of the firm except manager use the optimal order size instead of 200 boxes? The partners of the firm except the office to be managed "in a cost-efficient manner". Would you recommend that the office manager use the optimal order size instead of 200 boxes? Justify your answer. (05 Marks)

(b) A jewelry firm buys semiprecious stones to make bracelets and rings. The supplier quotes a price of $8 per stone for quantities of 600 stones or more, $9 per stone for orders of 400 to 599 stones, and $10 per stone for lesser quantities. The jewelry firm operates 200 days per year. Usage rate is 25 stones per day and ordering costs are $48.

i. If carrying costs are $2 per year for each stone, find the order quantity that will minimize total annual cost. (05 Marks)

ii. If annual carrying costs are 30% of unit cost, what is the optimal order size? (05 Marks)

CINEC CAMPUS
Beyond A Graduate

Faculty of Management and Social Sciences
Department of Logistics & Transport
BSc in International Transportation Management and Logistics
Course CODE: COM550

Question 03

(a) A drugstore uses fixed-order cycles for many of the items it stocks. The manager wants a service level of .98. The order interval is 14 days, and lead time is 2 days. Average demand for one item is 40 units per day, and the standard deviation of demand is 3 units per day. Given the on-hand inventory at the reorder time for each order cycle shown in the following table, determine the order quantities for cycles 2, 3, and 4: (10 Marks)

Table 3.1 – On hand Quantities

Cycle	On Hand
1	42
2	8
3	103

(b) The house keeping section of a motel uses approximately 400 washcloths per day. The actual number tends to vary with the number of guests on any given night. Usage can be approximated by a normal distribution that has a mean of 400 and a standard deviation of 9 washcloths per day. A linen supply company delivers towels and washcloths with a lead time of three days. If the motel policy is to maintain a stock out risk of 2 percent, what is the minimum number of washcloths that must be on hand at reorder time, and how much of that amount can be considered safety stock? (10 Marks)

CINEC CAMPUS
Beyond A Graduate

Faculty of Management and Social Sciences
Department of Logistics & Transport
BSc in International Transportation Management and Logistics
Course CODE: COM550

Question 04

(a) The manager of a store that sells office supplies has decided to set an annual service level of 96 percent for a certain model of telephone answering equipment. The store sells approximately 300 of this model a year. Holding cost is $5 per unit annually, ordering cost is $25, and $\sigma_{dLT} = 7$.

i. What average number of units per year will be consistent with the specified annual service level? (02 Marks)

ii. What average number of units short per cycle will provide the desired annual service level? (03 Marks)

iii. What lead time service level is necessary for the 96 percent annual service level? (05 Marks)

(a) Demand for long stemmed red roses at a small flower shop can be approximated using a Poisson distribution that has a mean of four dozen per day. Profit on the roses is $3 per dozen. Leftover flowers are marked down and sold the next day at a loss of $2 per dozen. Assume that all marked-down flowers are sold. What is the optimal stocking level. (10 Marks)

Table 4:1 - Demand

Demand (dozen per day)	Cumulative Frequency
0	0.018
1	0.092
2	0.238
3	0.433

4	0.629
5	0.785

Question 05

(a) End item P is composed of three subassemblies: K, L, and W. K is assembled using 3 Gs and 4 Hs; L is made of 2 Ms and 2 Ns; and W is made of 3 Zs. On-hand inventories are 20 Ls, 40 Gs, and 200Hs. Scheduled receipts are 10 Ks at the start of week 3, 30 Ks at the start of week 6, and 200 Ws at the start of week 3.

One hundred Ps will be shipped at the start of week 6, and another 100 at the start of week 7. Load times are two weeks for subassemblies and one week for components G, H, and M. Final assembly of P requires one week. Include an extra 10 percent scrap allowance in each planned order of G. The minimum order size for H is 200 units. Develop each of the following:

i. A product structure tree. (04 Marks)

ii. A master schedule for P. (04 Marks)

iii. Material requirements plan for K, G, and H using lot-for-lot ordering. (12 Marks)

Question 06

(a) Benefits of strategic warehousing can be categorized into two major groups as cost based and service based. Explain in detail, the cost-based benefits of warehousing. (10 Marks)

(b) Differentiate between assembly and production support benefits in warehousing. (05 Marks)

(c) "One of the major objectives of warehousing is providing communication links with the customers". Explain. (05 Marks)

Question 07

a) Explain in detail, the two basic systems of assigning locations for inventory in the warehouse. (06 Marks)

b) It's often said that, long haul transportation involved in a supply chain can be avoided through warehousing. Explain this statement in your own words. (06 Marks)

c) There're several factors which are considered when designing a warehouse. However, product flow is a crucial designing criterion to be considered when designing a warehouse. Elaborate why in your own words. (08 Marks)

Question 08

Write short notes on below topics (4*5 Marks)

a) Single story facility in warehousing

b) Cross Docking.

c) Types of Packaging.

d) Warehousing process.

----------END OF THE QUESTION PAPER----------

00018

TABLE 12.3 Normal distribution service levels and unit normal loss function

z	Lead Time Service Level	E(z)	z	Lead Time Service Level	E(z)	z	Lead Time Service Level	E(z)	z	Lead Time Service Level	E(z)
−2.40	.0082	2.403	−.80	.2119	.920	0.80	.7881	.120	2.40	.9918	.0030
−2.36	.0091	2.363	−.76	.2236	.889	0.84	.7995	.112	2.44	.9927	.0020
−2.32	.0102	2.323	−.72	.2358	.858	0.88	.8106	.104	2.48	.9934	.0020
−2.28	.0113	2.284	−.68	.2483	.828	0.92	.8212	.097	2.52	.9941	.0020
−2.24	.0125	2.244	−.64	.2611	.798	0.96	.8315	.089	2.56	.9948	.0020
−2.20	.0139	2.205	−.60	.2743	.769	1.00	.8413	.083	2.60	.9953	.0010
−2.16	.0154	2.165	−.56	.2877	.740	1.04	.8508	.077	2.64	.9959	.0010
−2.12	.0170	2.126	−.52	.3015	.712	1.08	.8599	.071	2.68	.9963	.0010
−2.08	.0188	2.087	−.48	.3156	.684	1.12	.8686	.066	2.72	.9967	.0010
−2.04	.0207	2.048	−.44	.3300	.657	1.16	.8770	.061	2.76	.9971	.0010
−2.00	.0228	2.008	−.40	.3446	.630	1.20	.8849	.056	2.80	.9974	.0008
−1.96	.0250	1.969	−.36	.3594	.597	1.24	.8925	.052	2.84	.9977	.0007
−1.92	.0274	1.930	−.32	.3745	.576	1.28	.8997	.048	2.88	.9980	.0006
−1.88	.0301	1.892	−.28	.3897	.555	1.32	.9066	.044	2.92	.9982	.0005
−1.84	.0329	1.853	−.24	.4052	.530	1.36	.9131	.040	2.96	.9985	.0004
−1.80	.0359	1.814	−.20	.4207	.507	1.40	.9192	.037	3.00	.9987	.0004
−1.76	.0392	1.776	−.16	.4364	.484	1.44	.9251	.034	3.04	.9988	.0003
−1.72	.0427	1.737	−.12	.4522	.462	1.48	.9306	.031	3.08	.9990	.0003
−1.68	.0465	1.699	−.08	.4681	.440	1.52	.9357	.028	3.12	.9991	.0002
−1.64	.0505	1.661	−.04	.4840	.419	1.56	.9406	.026	3.16	.9992	.0002
−1.60	.0548	1.623	.00	.5000	.399	1.60	.9452	.023	3.20	.9993	.0002
−1.56	.0594	1.586	.04	.5160	.379	1.64	.9495	.021	3.24	.9994	.0001
−1.52	.0643	1.548	.08	.5319	.360	1.68	.9535	.019	3.28	.9995	.0001
−1.48	.0694	1.511	.12	.5478	.342	1.72	.9573	.017	3.32	.9995	.0001
−1.44	.0749	1.474	.16	.5636	.324	1.76	.9608	.016	3.36	.9996	.0001
−1.40	.0808	1.437	.20	.5793	.307	1.80	.9641	.014	3.40	.9997	.0001
−1.36	.0869	1.400	.24	.5948	.290	1.84	.9671	.013			
−1.32	.0934	1.364	.28	.6103	.275	1.88	.9699	.012			
−1.28	.1003	1.328	.32	.6255	.256	1.92	.9726	.010			
−1.24	.1075	1.292	.36	.6406	.237	1.96	.9750	.009			
−1.20	.1151	1.256	.40	.6554	.230	2.00	.9772	.008			
−1.16	.1230	1.221	.44	.6700	.217	2.04	.9793	.008			
−1.12	.1314	1.186	.48	.6844	.204	2.08	.9812	.007			
−1.08	.1401	1.151	.52	.6985	.192	2.12	.9830	.006			
−1.04	.1492	1.117	.56	.7123	.180	2.16	.9846	.005			
−1.00	.1587	1.083	.60	.7257	.169	2.20	.9861	.005			
−.96	.1685	1.049	.64	.7389	.158	2.24	.9875	.004			
−.92	.1788	1.017	.68	.7517	.148	2.28	.9887	.004			
−.88	.1894	0.984	.72	.7642	.138	2.32	.9898	.003			
−.84	.2005	0.952	.76	.7764	.129	2.36	.9909	.003			

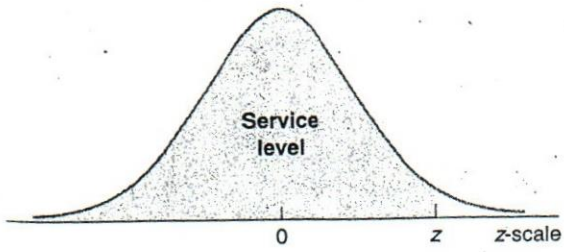

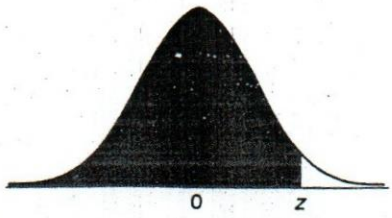

Table B
(concluded)
2. Areas under the standardized normal curve, from $-\infty$ to $+z$

z	.00	.01	.02	.03	.04	.05	.06	.07	.08	.09
.0	.5000	.5040	.5080	.5120	.5160	.5199	.5239	.5279	.5319	.5359
.1	.5398	.5438	.5478	.5517	.5557	.5596	.5636	.5675	.5714	.5753
.2	.5793	.5832	.5871	.5910	.5948	.5987	.6026	.6064	.6103	.6141
.3	.6179	.6217	.6255	.6293	.6331	.6368	.6406	.6443	.6480	.6517
.4	.6554	.6591	.6628	.6664	.6700	.6736	.6772	.6808	.6844	.6879
.5	.6915	.6950	.6985	.7019	.7054	.7088	.7123	.7157	.7190	.7224
.6	.7257	.7291	.7324	.7357	.7389	.7422	.7454	.7486	.7517	.7549
.7	.7580	.7611	.7642	.7673	.7703	.7734	.7764	.7794	.7823	.7852
.8	.7881	.7910	.7939	.7967	.7995	.8023	.8051	.8078	.8106	.8133
.9	.8159	.8186	.8212	.8238	.8264	.8289	.8315	.8340	.8365	.8389
1.0	.8413	.8438	.8461	.8485	.8508	.8531	.8554	.8577	.8599	.8621
1.1	.8643	.8665	.8686	.8708	.8729	.8749	.8770	.8790	.8810	.8830
1.2	.8849	.8869	.8888	.8907	.8925	.8944	.8962	.8980	.8997	.9015
1.3	.9032	.9049	.9066	.9082	.9099	.9115	.9131	.9147	.9162	.9177
1.4	.9192	.9207	.9222	.9236	.9251	.9265	.9279	.9292	.9306	.9319
1.5	.9332	.9345	.9357	.9370	.9382	.9394	.9406	.9418	.9429	.9441
1.6	.9452	.9463	.9474	.9484	.9495	.9505	.9515	.9525	.9535	.9545
1.7	.9554	.9564	.9573	.9582	.9591	.9599	.9608	.9616	.9625	.9633
1.8	.9641	.9649	.9656	.9664	.9671	.9678	.9686	.9693	.9699	.9706
1.9	.9713	.9719	.9726	.9732	.9738	.9744	.9750	.9756	.9761	.9767
2.0	.9772	.9778	.9783	.9788	.9793	.9798	.9803	.9808	.9812	.9817
2.1	.9821	.9826	.9830	.9834	.9838	.9842	.9846	.9850	.9854	.9857
2.2	.9861	.9864	.9868	.9871	.9875	.9878	.9881	.9884	.9887	.9890
2.3	.9893	.9896	.9898	.9901	.9904	.9906	.9909	.9911	.9913	.9916
2.4	.9918	.9920	.9922	.9925	.9927	.9929	.9931	.9932	.9934	.9936
2.5	.9938	.9940	.9941	.9943	.9945	.9946	.9948	.9949	.9951	.9952
2.6	.9953	.9955	.9956	.9957	.9959	.9960	.9961	.9962	.9963	.9964
2.7	.9965	.9966	.9967	.9968	.9969	.9970	.9971	.9972	.9973	.9974
2.8	.9974	.9975	.9976	.9977	.9977	.9978	.9979	.9979	.9980	.9981
2.9	.9981	.9982	.9982	.9983	.9984	.9984	.9985	.9985	.9986	.9986
3.0	.9987	.9987	.9987	.9988	.9988	.9989	.9989	.9989	.9990	.9990
3.1	.9990	.9991	.9991	.9991	.9992	.9992	.9992	.9992	.9993	.9993
3.2	.9993	.9993	.9994	.9994	.9994	.9994	.9994	.9995	.9995	.9995
3.3	.9995	.9995	.9995	.9996	.9996	.9996	.9996	.9996	.9996	.9997
3.4	.9997	.9997	.9997	.9997	.9997	.9997	.9997	.9997	.9997	.9998

Table B
1. Areas under the standardized normal curve, from $-\infty$ to $-z$

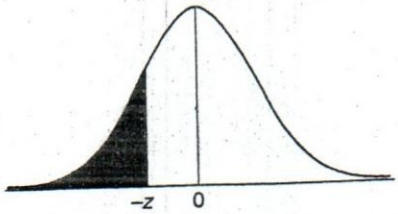

.09	.08	.07	.06	.05	.04	.03	.02	.01	.00	z
.0002	.0003	.0003	.0003	.0003	.0003	.0003	.0003	.0003	.0003	−3.4
.0003	.0004	.0004	.0004	.0004	.0004	.0004	.0005	.0005	.0005	−3.3
.0005	.0005	.0005	.0006	.0006	.0006	.0006	.0006	.0007	.0007	−3.2
.0007	.0007	.0008	.0008	.0008	.0008	.0009	.0009	.0009	.0010	−3.1
.0010	.0010	.0011	.0011	.0011	.0012	.0012	.0013	.0013	.0013	−3.0
.0014	.0014	.0015	.0015	.0016	.0016	.0017	.0018	.0018	.0019	−2.9
.0019	.0020	.0021	.0021	.0022	.0023	.0023	.0024	.0025	.0026	−2.8
.0026	.0027	.0028	.0029	.0030	.0031	.0032	.0033	.0034	.0035	−2.7
.0036	.0037	.0038	.0039	.0040	.0041	.0043	.0044	.0045	.0047	−2.6
.0048	.0049	.0051	.0052	.0054	.0055	.0057	.0059	.0060	.0062	−2.5
.0064	.0066	.0068	.0069	.0071	.0073	.0075	.0078	.0080	.0082	−2.4
.0084	.0087	.0089	.0091	.0094	.0096	.0099	.0102	.0104	.0107	−2.3
.0110	.0113	.0116	.0119	.0122	.0125	.0129	.0132	.0136	.0139	−2.2
.0143	.0146	.0150	.0154	.0158	.0162	.0166	.0170	.0174	.0179	−2.1
.0183	.0188	.0192	.0197	.0202	.0207	.0212	.0217	.0222	.0228	−2.0
.0233	.0239	.0244	.0250	.0256	.0262	.0268	.0274	.0281	.0287	−1.9
.0294	.0301	.0307	.0314	.0322	.0329	.0336	.0344	.0351	.0359	−1.8
.0367	.0375	.0384	.0392	.0401	.0409	.0418	.0427	.0436	.0446	−1.7
.0455	.0465	.0475	.0485	.0495	.0505	.0516	.0526	.0537	.0548	−1.6
.0559	.0571	.0582	.0594	.0606	.0618	.0630	.0643	.0655	.0668	−1.5
.0681	.0694	.0708	.0721	.0735	.0749	.0764	.0778	.0793	.0808	−1.4
.0823	.0838	.0853	.0869	.0885	.0901	.0918	.0934	.0951	.0968	−1.3
.0985	.1003	.1020	.1038	.1056	.1075	.1093	.1112	.1131	.1151	−1.2
.1170	.1190	.1210	.1230	.1251	.1271	.1292	.1314	.1335	.1357	−1.1
.1379	.1401	.1423	.1446	.1469	.1492	.1515	.1539	.1562	.1587	−1.0
.1611	.1635	.1660	.1685	.1711	.1736	.1762	.1788	.1814	.1841	−0.9
.1867	.1894	.1922	.1949	.1977	.2005	.2033	.2061	.2090	.2119	−0.8
.2148	.2177	.2206	.2236	.2266	.2296	.2327	.2358	.2389	.2420	−0.7
.2451	.2483	.2514	.2546	.2578	.2611	.2643	.2676	.2709	.2743	−0.6
.2776	.2810	.2843	.2877	.2912	.2946	.2981	.3015	.3050	.3085	−0.5
.3121	.3156	.3192	.3228	.3264	.3300	.3336	.3372	.3409	.3446	−0.4
.3483	.3520	.3557	.3594	.3632	.3669	.3707	.3745	.3783	.3821	−0.3
.3859	.3897	.3936	.3974	.4013	.4052	.4090	.4129	.4168	.4207	−0.2
.4247	.4286	.4325	.4364	.4404	.4443	.4483	.4522	.4562	.4602	−0.1
.4641	.4681	.4721	.4761	.4801	.4840	.4880	.4920	.4960	.5000	−0.0

Model	Formula		Symbols
1. Basic EOQ	$Q_0 = \sqrt{\frac{2DS}{H}}$	(12–2)	Q_0 = Economic order quantity D = Annual demand S = Order cost H = Annual carrying cost per unit Q = Order quantity
	$TC = \frac{Q}{2}H + \frac{D}{Q}S$	(12–1)	
	Length of order cycle $= \frac{Q}{D}$	(12–3)	
2. Economic production quantity	$Q_o = \sqrt{\frac{2DS}{H}}\sqrt{\frac{p}{p-u}}$	(12–5)	Q_o = Optimal run or order size p = Production or delivery rate u = Usage rate I_{MAX} = Maximum inventory level
	$TC = \frac{I_{max}}{2}H + \frac{D}{Q}S$	(12–4)	
	Cycle time $= \frac{Q}{u}$	(12–6)	
	Run time $= \frac{Q}{p}$	(12–7)	
	$I_{max} = \frac{Q_0}{p}(p-u)$.	(12–8)	
3. Quantity discounts	$TC = \frac{Q}{2}H + \frac{D}{Q}S + PD$	(12–9)	P = Unit price
4. Reorder point under: a. Constant demand and lead time b. Variable demand rate c. Variable lead time d. Variable lead time and demand	$ROP = d(LT)$	(12–10)	ROP = Quantity on hand at reorder point d = Demand rate LT = Lead time $\bar{d}$ = Average demand rate σ_d = Standard deviation of demand rate z = Standard normal deviation $\overline{LT}$ = Average lead time σ_{LT} = Standard deviation of lead time
	$ROP = \bar{d}\,\overline{LT} + z(\sigma_d)\sqrt{LT}$	(12–13)	
	$ROP = d\overline{LT} + z(\sigma_{LT})d$	(12–14)	
	$ROP = \bar{d}\,\overline{LT} + z\sqrt{\overline{LT}\sigma_d^2 + \bar{d}^2\sigma_{LT}^2}$	(12–15)	
5. ROP shortages a. Units short per cycle b. Units short per year c. Annual service level	$E(n) = E(z)\sigma_{dLT}$	(12–16)	$E(n)$ = Expected number short per cycle $E(z)$ = Standardized number short σ_{dLT} = Standard deviation of lead time demand $E(N)$ = Expected number short per year SL_{annual} = Annual service level
	$E(N) = E(n)\frac{D}{Q}$	(12–17)	
	$SL_{annual} = 1 - \frac{E(z)\sigma_{dLT}}{Q}$	(12–19)	
6. Fixed interval	$Q = \bar{d}(OI + LT) + z\sigma_d\sqrt{OI + LT} - A$	(12–20)	OI = Time between orders A = Amount on hand at order time
7. Single period	$SL = \frac{C_s}{C_s + C_e}$	(12–21)	SL = Service level C_s = Shortage cost per unit C_e = Excess cost per unit

00018

Library

CINEC CAMPUS
Beyond A Graduate

CINEC Campus, Sri Lanka
NOT TO BE TAKEN AWAY WITHOUT PROPER AUTHORIZATION
Learning Resource Centre - (Library)

Faculty of Management and Social Sciences
Department of Logistics & Transport
BSc in International Transportation Management and Logistics
Course CODE: COM550

Year 2 Semester II

REPEAT EXAMINATION

Port Management – PORT0352

- This paper consists of EIGHT questions on TWO (02) pages.
- Answer FIVE Questions including Question 01.
- Only non-programmable calculators are allowed.
- You may use appropriate graphs, diagrams, equation/s to prove or justify the answers.
- If you have any doubt as to the interpretation of the wording of a question, make your own decision, but clearly state it on the script.
- Write legibly

Date: 2022.06.12 Pass mark: 50% Time: 03 Hours

Question 01 (Compulsory)

a) Explain what is a Sea Port? (10 Marks)
b) List out sea related Navigational Facilities? (5 Marks)
c) List out land based Port Facilities? (5 Marks)

Question 02

a) Name commercial port in Sri Lanka? (5 Marks)
b) What are the facilities available in the Port of Colombo? (5 Marks)
c) What are the facilities available in the Port of Galle? (5 Marks)
d) What are the facilities available in the Port of Trincomalee? (5 Marks)

Question 03

a) Explain why ports are measured by their performances? (10 Marks)
b) Describe types of performance measures of ports? (10 Marks)

Question 04

Describe Sri Lanka Ports Authority including its functions, powers & duties? (20 Marks)

Question 05

a) Colombo old Harbour built by British was expanded later, explain reasons for this expansion.

CINEC CAMPUS
Beyond A Graduate

Faculty of Management and Social Sciences
Department of Logistics & Transport
BSc in International Transportation Management and Logistics
Course CODE: COM550

b) Describe Colombo Port Expansion Project with planned facilities?
(20 Marks)

Question 06

a) List port related value-added logistic services?
(10 Marks)

b) What are the functions of Sri Lanka Ports Authority Logistics Division?
(10 Marks)

Question 07

Describe Hambantota Port Management including facilities?
(20 Marks)

Question 08

a) Describe service port marketing and list out marketing tools to promote the port?
(10 Marks)

b) Who are the port customers & list out their expectations?
(10 Marks)

----------END OF THE QUESTION PAPER----------

library

00002

CINEC CAMPUS
Beyond A Graduate

Faculty of Management and Social Sciences
Department of Logistics & Transport
BSc in International Transportation Management and Logistics
Course CODE: COM550

Year 2 Semester II

REPEAT EXAMINATION – OLD SYLLABUS

E-Commerce – ECOM0319

- This paper consists of EIGHT questions on FOUR (04) pages.
- Answer FIVE Questions including Question 01.
- Only non-programmable calculators are allowed.
- You may use appropriate graphs, diagrams, equation/s to prove or justify the answers.
- If you have any doubt as to the interpretation of the wording of a question, make your own decision, but clearly state it on the script.
- Write legibly

Date: 2020.09.26 Pass mark: 50% Time: 03 Hours

Question 01 (Compulsory)

(a) Distinguish between Business Model, Business Plan and an E-commerce Business Model. (03 Marks)

(b) What are the key elements of a Business Model? Explain two (02) of them in brief (05 Marks)

(c) List down the five (05) Revenue Models used by E-commerce associated organizations/companies. Explain two (02) of them in detail including appropriate examples. (06 Marks)

(d) Describe how E-commerce will affect the changes of an industry wide value chain, with examples of E-commerce applications. (06 Marks)

CINEC CAMPUS
Beyond A Graduate

Faculty of Management and Social Sciences
Department of Logistics & Transport
BSc in International Transportation Management and Logistics
Course CODE: COM550

Question 02

(a) Explain 5 stages in Software Development Life Cycle. (10 Marks)
(b) What is a digital certificate? Explain (04 Marks)
(c) What is Encryption? Explain with a diagram. (06 Marks)

Question 03

(a) Briefly explain any four (04) concepts from following
- (01) Intranet
- (02) VPN
- (03) Encryption
- (04) Fiber Optic Cable
- (05) Internet Telephony (08 Marks)

(b) Explain six (06) key dimensions that are applied on an E-commerce security environment. (12 Marks)

Question 04

(a) Explain the term E-commerce in your own words. (03 Marks)
(b) Briefly describe the advantages of E-commerce over traditional commerce or business (04 Marks)
(c) Describe in brief how business applications in the world have changed according to the ICT technology evolutions. (05 Marks)
(d) List down the unique features of E-commerce. Explain two (02) of them in brief using appropriate examples. (06 Marks)
(e) Distinguish between web 1.0 and web 2.0 (02 Marks)

CINEC CAMPUS
Beyond A Graduate

Faculty of Management and Social Sciences
Department of Logistics & Transport
BSc in International Transportation Management and Logistics
Course CODE: COM550

Question 05

(a) Write down five (05) methods of E-commerce payment and briefly explain them. (10 Marks)

(b) Using an appropriate diagram, briefly explain the major participants in Online credit card transaction. (06 Marks)

(c) Explain Malicious codes by giving two (02) examples. (04 Marks)

Question 06

(a) Explain why the internet is at the root of many contemporary controversies? (05 Marks)

(b) Identify the unique features of E-commerce Technology, and explain their potential ethical, social and political implications. (10 Marks)

(c) Explain the criticisms of IP rights. (05 Marks)

Question 07

(a) What is a HTML page? (02 Marks)

(b) Write HTML code segments for following situation.

(i) To insert the title "ABC Books" to web page (02 Marks)

(ii) To insert the heading "Book Details" (02 Marks)

(iii) To insert a list with following details (03 Marks)

1. Children Books
2. Novels
3. Educational Books

(iv) To link to another web page "https://www.yahoo.com/" (02 Marks)

(v) To insert the following paragraph. Font should be **Bolded**. (03 Marks)
"ABC have an extensive collection of books to purchase online and in store"

(vi) To insert following table.

Exercise Book	**Price**
20 pages single rule	Rs. 60
40 pages single rule	Rs. 120

CINEC CAMPUS
Beyond A Graduate

Faculty of Management and Social Sciences
Department of Logistics & Transport
BSc in International Transportation Management and Logistics
Course CODE: COM550

(06 Marks)

Question 08

Briefly describe the followings. (4*5 Marks)

(a) Value proposition.
(b) Industry consortia.
(c) Market creator.
(d) Ethical Dilemmas and steps of analysis.
(e) P2P network.

----------END OF THE QUESTION PAPER----------

00036

CINEC CAMPUS
Beyond A Graduate

Faculty of Management and Social Sciences
Department of Logistics & Transport
BSc in International Transportation Management and Logistics
Course CODE: COM550

Year 2 Semester II

SEMESTER END EXAMINATION

Port Management – PORT0352

- This paper consists of EIGHT questions on TWO (02) pages.
- Answer FIVE Questions including Question 01.
- Only non-programmable calculators are allowed.
- You may use appropriate graphs, diagrams, equation/s to prove or justify the answers.
- If you have any doubt as to the interpretation of the wording of a question, make your own decision, but clearly state it on the script.
- Write legibly

Date: 2020.09.20 Pass mark: 50% Time: 03 Hours

Question 01 (Compulsory)

(a) Explain what is a Sea Port? (10 Marks)
(b) List out sea related Navigational Facilities? (05 Marks)
(c) List out land based Port Facilities? (05 Marks)

Question 02

(a) Name commercial port in Sri Lanka? (05 Marks)
(b) What are the facilities available in the Port of Colombo? (05 Marks)
(c) What are the facilities available in the Port of Galle? (05 Marks)
(d) What are the facilities available in the Port of Trincomalee? (05 Marks)

Question 03

(a) Explain why ports are measured by their performances? (10 Marks)
(b) Describe types of performance measures of ports? (10 Marks)

Question 04

Describe Sri Lanka Ports Authority including its functions, powers & duties? (20 Marks)

Library

00036

CINEC CAMPUS
Beyond A Graduate

Faculty of Management and Social Sciences
Department of Logistics & Transport
BSc in International Transportation Management and Logistics
Course CODE: COM550

Question 05

(a) Colombo old Harbour built by British was expanded later, explain reasons for this expansion.
(b) Describe Colombo Port Expansion Project with planned facilities?

(20 Marks)

Question 06

(a) List port related value-added logistic services?

(10 Marks)

(b) What are the functions of Sri Lanka Ports Authority Logistics Division?

(10 Marks)

Question 07

Describe Hambantota Port Management including facilities?

(20 Marks)

Question 08

(a) Describe service port marketing and list out marketing tools to promote the port? (10 Marks)
(b) Who are the port customers & list out their expectations?

(10 Marks)

----------END OF THE QUESTION PAPER----------

Library

00037

CINEC CAMPUS
Beyond A Graduate

Faculty of Management and Social Sciences
Department of Logistics & Transport
BSc in International Transportation Management and Logistics
Course CODE: COM550

Year 2 Semester II

SEMESTER END EXAMINATION

Inventory and Warehouse Management – IWMG0348

- This paper consists of EIGHT questions on FIVE (05) pages.
- Answer FIVE Questions including Question 01.
- Only non-programmable calculators are allowed.
- You may use appropriate graphs, diagrams, equation/s to prove or justify the answers.
- If you have any doubt as to the interpretation of the wording of a question, make your own decision, but clearly state it on the script.
- Write legibly
- Required statistical tables are attached.

Date: 2020.09.17 Pass mark: 50% Time: 03 Hours

Question 01: (Compulsory)

(a) Surge Electric uses 4,000 toggle switches a year. Switches are priced as follows: 1 to 499, 90 cents each; 500 to 999, 85 cents each; and 1,000 or more, 80 cents each. It costs approximately $30 to prepare an order and receive it, and carrying costs are 40 percent of purchase price per unit on an annual basis. Determine the optimal order quantity and the total annual cost. (10 Marks)

(b) Define the term "Warehousing"? (02 Marks)

(c) What are the objectives of a Warehouse? (04 Marks)

(d) Name **FOUR** Warehouse Operating Principles (04 Marks)

Faculty of Management and Social Sciences
Department of Logistics & Transport
BSc in International Transportation Management and Logistics
Course CODE: COM550

Question 02

(a) A local distributor for a national tire company expects to sell approximately 9600 steel belted radial tires of a certain size and trend design next year. Annual caryying cost is $16 per tire, and ordering cost is $75. The distributor operates 288 days a year.

(i) What is the EOQ? (03 Marks)

(ii) How many times per year does the store reorder? (02 Marks)

(iii) What is the lenghth of an order cycle? (02 Marks)

(iv) What is the total annual cost if the EOQ quantity is ordered? (03 Marks)

(b) A toy manufacturer uses 48000 rubber wheels peryear for its popular dump truck series.The firm makes its own wheels, which it can produce at arate of 800 per day. The toy trucks are assembled uniformly over the entire year. Carrying cost is $1 per wheel a year. Setup cost for a production run of wheels is $45. The firm operates 240 days peryear. Determine the

(i) Optimal run size (03 Marks)

(ii) Minimum total annual cost fro carrying and setup (03 Marks)

(iii) Cycle for the optimal runsize (02 Marks)

(iv) Runtime (02 Marks)

Faculty of Management and Social Sciences
Department of Logistics & Transport
BSc in International Transportation Management and Logistics
Course CODE: COM550

Question 03

(a) A restaurant uses an average of 50 jars of a special source each week. Weekly usage of sauce has a standard deviation of 3 jars. The manager is willing to accept no more than a 10% risk of stockout during lead time, which is two weeks. Assume the distribution of usage is normal.

(i) Which of the ROP formula is appropriate for this situation? Why? (03 Marks)

(ii) Determine the value of z. (03 Marks)

(iii) Determine the ROP. (04 Marks)

(b) The housekeeping department of a motel uses approximately 600 bars of soap each day, and this tends to be fairly constant. Lead time for soap delivery is normally distributed with a mean of 6 days and a standard deviation of two days. A service level 90% is desired.

(i) Find the ROP. (05 Marks)

(ii) How many days of supply are on hand at the ROP? (05 Marks)

Question 04

(a) A lab orders a number of chemicals from the same supplier every 30 days. Lead time is five days. The assistant manager of the lab must determine how much of one of these chemicals to order. A check of stock revealed that eleven 25 ml jars are on hand. Daily usage of the chemical is approximately normal with a mean of 15.2 ml per day and a standard deviation of 1.6 ml per day. The desired service level for this chemical is 95%.

(i) How many jars of the chemical should be ordered? (10 Marks)

(ii) What is the average amount of safety stock of the chemical? (10 Marks)

Question 05

One unit of A is made of two units of B and one unit of C. B is made of three units of D and one unit of F. C is composed of three units of B, one unit of D, and four units of E. D is made of one unit of E. Item C has a lead time of one week; Items A, B, E, and F have two-week lead times; and Item D has a lead time of three weeks.

Lot-far-lot lot sizing is used for Items C, E, and F; lots of size 20, 40, and 160 are used for items A, B, and D, respectively. Items A, B, D, and E have on-hand (beginning) inventories of 5, 10, 100, and 100, respectively; all other items have zero beginning inventories. We are scheduled to receive 10 units of A in Week 3, 20 units of B in Week 7, 40 units of F in week 5 and 60 units of E in Week 2; there are no other schedule receipts. If 20 units of A are required in Week 10, use the low-level-coded bill of materials (product structure tree) to find the necessary planned order releases for all components. (20 Marks)

Question 06

a) List down basic Warehouse functions and Explain in Brief? (10 Marks)

b) Why Warehousing plays a major role in supply chain? Explain briefly? (10 Marks)

Question 07

(a) Define the term "Cross-Docking"? (03 Marks)

(b) State **FIVE** advantages of Cross-Docking and Explain **TWO** in brief (07 Marks)

(c) Discuss the challenges of implementing Cross-Docking operation at Warehouses (10 Marks)

CINEC CAMPUS
Beyond A Graduate

Faculty of Management and Social Sciences
Department of Logistics & Transport
BSc in International Transportation Management and Logistics
Course CODE: COM550

Question 08

a) State **THREE** factors considered when designing a Warehouse? (03 Marks)

b) List down **FOUR** Alternative Warehouse Strategies and Explain **TWO** in brief (08 Marks)

(c) Why Health and Safety plays an important role in Warehouse (09 Marks)

----------END OF THE QUESTION PAPER----------

Table B
1. Areas under the standardized normal curve, from $-\infty$ to $-z$

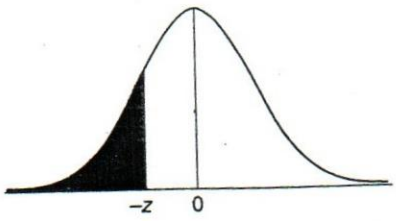

.09	.08	.07	.06	.05	.04	.03	.02	.01	.00	z
.0002	.0003	.0003	.0003	.0003	.0003	.0003	.0003	.0003	.0003	−3.4
.0003	.0004	.0004	.0004	.0004	.0004	.0004	.0005	.0005	.0005	−3.3
.0005	.0005	.0005	.0006	.0006	.0006	.0006	.0006	.0007	.0007	−3.2
.0007	.0007	.0008	.0008	.0008	.0008	.0009	.0009	.0009	.0010	−3.1
.0010	.0010	.0011	.0011	.0011	.0012	.0012	.0013	.0013	.0013	−3.0
.0014	.0014	.0015	.0015	.0016	.0016	.0017	.0018	.0018	.0019	−2.9
.0019	.0020	.0021	.0021	.0022	.0023	.0023	.0024	.0025	.0026	−2.8
.0026	.0027	.0028	.0029	.0030	.0031	.0032	.0033	.0034	.0035	−2.7
.0036	.0037	.0038	.0039	.0040	.0041	.0043	.0044	.0045	.0047	−2.6
.0048	.0049	.0051	.0052	.0054	.0055	.0057	.0059	.0060	.0062	−2.5
.0064	.0066	.0068	.0069	.0071	.0073	.0075	.0078	.0080	.0082	−2.4
.0084	.0087	.0089	.0091	.0094	.0096	.0099	.0102	.0104	.0107	−2.3
.0110	.0113	.0116	.0119	.0122	.0125	.0129	.0132	.0136	.0139	−2.2
.0143	.0146	.0150	.0154	.0158	.0162	.0166	.0170	.0174	.0179	−2.1
.0183	.0188	.0192	.0197	.0202	.0207	.0212	.0217	.0222	.0228	−2.0
.0233	.0239	.0244	.0250	.0256	.0262	.0268	.0274	.0281	.0287	−1.9
.0294	.0301	.0307	.0314	.0322	.0329	.0336	.0344	.0351	.0359	−1.8
.0367	.0375	.0384	.0392	.0401	.0409	.0418	.0427	.0436	.0446	−1.7
.0455	.0465	.0475	.0485	.0495	.0505	.0516	.0526	.0537	.0548	−1.6
.0559	.0571	.0582	.0594	.0606	.0618	.0630	.0643	.0655	.0668	−1.5
.0681	.0694	.0708	.0721	.0735	.0749	.0764	.0778	.0793	.0808	−1.4
.0823	.0838	.0853	.0869	.0885	.0901	.0918	.0934	.0951	.0968	−1.3
.0985	.1003	.1020	.1038	.1056	.1075	.1093	.1112	.1131	.1151	−1.2
.1170	.1190	.1210	.1230	.1251	.1271	.1292	.1314	.1335	.1357	−1.1
.1379	.1401	.1423	.1446	.1469	.1492	.1515	.1539	.1562	.1587	−1.0
.1611	.1635	.1660	.1685	.1711	.1736	.1762	.1788	.1814	.1841	−0.9
.1867	.1894	.1922	.1949	.1977	.2005	.2033	.2061	.2090	.2119	−0.8
.2148	.2177	.2206	.2236	.2266	.2296	.2327	.2358	.2389	.2420	−0.7
.2451	.2483	.2514	.2546	.2578	.2611	.2643	.2676	.2709	.2743	−0.6
.2776	.2810	.2843	.2877	.2912	.2946	.2981	.3015	.3050	.3085	−0.5
.3121	.3156	.3192	.3228	.3264	.3300	.3336	.3372	.3409	.3446	−0.4
.3483	.3520	.3557	.3594	.3632	.3669	.3707	.3745	.3783	.3821	−0.3
.3859	.3897	.3936	.3974	.4013	.4052	.4090	.4129	.4168	.4207	−0.2
.4247	.4286	.4325	.4364	.4404	.4443	.4483	.4522	.4562	.4602	−0.1
.4641	.4681	.4721	.4761	.4801	.4840	.4880	.4920	.4960	.5000	−0.0

00037

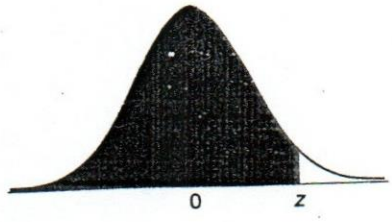

Table B
(concluded)
2. Areas under the standardized normal curve, from $-\infty$ to $+z$

z	.00	.01	.02	.03	.04	.05	.06	.07	.08	.09
.0	.5000	.5040	.5080	.5120	.5160	.5199	.5239	.5279	.5319	.5359
.1	.5398	.5438	.5478	.5517	.5557	.5596	.5636	.5675	.5714	.5753
.2	.5793	.5832	.5871	.5910	.5948	.5987	.6026	.6064	.6103	.6141
.3	.6179	.6217	.6255	.6293	.6331	.6368	.6406	.6443	.6480	.6517
.4	.6554	.6591	.6628	.6664	.6700	.6736	.6772	.6808	.6844	.6879
.5	.6915	.6950	.6985	.7019	.7054	.7088	.7123	.7157	.7190	.7224
.6	.7257	.7291	.7324	.7357	.7389	.7422	.7454	.7486	.7517	.7549
.7	.7580	.7611	.7642	.7673	.7703	.7734	.7764	.7794	.7823	.7852
.8	.7881	.7910	.7939	.7967	.7995	.8023	.8051	.8078	.8106	.8133
.9	.8159	.8186	.8212	.8238	.8264	.8289	.8315	.8340	.8365	.8389
1.0	.8413	.8438	.8461	.8485	.8508	.8531	.8554	.8577	.8599	.8621
1.1	.8643	.8665	.8686	.8708	.8729	.8749	.8770	.8790	.8810	.8830
1.2	.8849	.8869	.8888	.8907	.8925	.8944	.8962	.8980	.8997	.9015
1.3	.9032	.9049	.9066	.9082	.9099	.9115	.9131	.9147	.9162	.9177
1.4	.9192	.9207	.9222	.9236	.9251	.9265	.9279	.9292	.9306	.9319
1.5	.9332	.9345	.9357	.9370	.9382	.9394	.9406	.9418	.9429	.9441
1.6	.9452	.9463	.9474	.9484	.9495	.9505	.9515	.9525	.9535	.9545
1.7	.9554	.9564	.9573	.9582	.9591	.9599	.9608	.9616	.9625	.9633
1.8	.9641	.9649	.9656	.9664	.9671	.9678	.9686	.9693	.9699	.9706
1.9	.9713	.9719	.9726	.9732	.9738	.9744	.9750	.9756	.9761	.9767
2.0	.9772	.9778	.9783	.9788	.9793	.9798	.9803	.9808	.9812	.9817
2.1	.9821	.9826	.9830	.9834	.9838	.9842	.9846	.9850	.9854	.9857
2.2	.9861	.9864	.9868	.9871	.9875	.9878	.9881	.9884	.9887	.9890
2.3	.9893	.9896	.9898	.9901	.9904	.9906	.9909	.9911	.9913	.9916
2.4	.9918	.9920	.9922	.9925	.9927	.9929	.9931	.9932	.9934	.9936
2.5	.9938	.9940	.9941	.9943	.9945	.9946	.9948	.9949	.9951	.9952
2.6	.9953	.9955	.9956	.9957	.9959	.9960	.9961	.9962	.9963	.9964
2.7	.9965	.9966	.9967	.9968	.9969	.9970	.9971	.9972	.9973	.9974
2.8	.9974	.9975	.9976	.9977	.9977	.9978	.9979	.9979	.9980	.9981
2.9	.9981	.9982	.9982	.9983	.9984	.9984	.9985	.9985	.9986	.9986
3.0	.9987	.9987	.9987	.9988	.9988	.9989	.9989	.9989	.9990	.9990
3.1	.9990	.9991	.9991	.9991	.9992	.9992	.9992	.9992	.9993	.9993
3.2	.9993	.9993	.9994	.9994	.9994	.9994	.9994	.9995	.9995	.9995
3.3	.9995	.9995	.9995	.9996	.9996	.9996	.9996	.9996	.9996	.9997
3.4	.9997	.9997	.9997	.9997	.9997	.9997	.9997	.9997	.9997	.9998

00037

Model	Formula		Symbols
1. Basic EOQ	$Q_0 = \sqrt{\frac{2DS}{H}}$	(12–2)	Q_0 = Economic order quantity D = Annual demand S = Order cost H = Annual carrying cost per unit Q = Order quantity
	$TC = \frac{Q}{2}H + \frac{D}{Q}S$	(12–1)	
	Length of order cycle $= \frac{Q}{D}$	(12–3)	
2. Economic production quantity	$Q_0 = \sqrt{\frac{2DS}{H}}\sqrt{\frac{p}{p-u}}$	(12–5)	Q_0 = Optimal run or order size p = Production or delivery rate u = Usage rate I_{MAX} = Maximum inventory level
	$TC = \frac{I_{max}}{2}H + \frac{D}{Q}S$	(12–4)	
	Cycle time $= \frac{Q}{u}$	(12–6)	
	Run time $= \frac{Q}{p}$	(12–7)	
	$I_{max} = \frac{Q_0}{p}(p-u)$	(12–8)	
3. Quantity discounts	$TC = \frac{Q}{2}H + \frac{D}{Q}S + PD$	(12–9)	P = Unit price
4. Reorder point under:			ROP = Quantity on hand at reorder point
a. Constant demand and lead time	$ROP = d(LT)$	(12–10)	d = Demand rate
b. Variable demand rate	$ROP = \bar{d}\overline{LT} + z(\sigma_d)\sqrt{LT}$	(12–13)	LT = Lead time
c. Variable lead time	$ROP = \bar{d}\overline{LT} + z(\sigma_{LT})\bar{d}$	(12–14)	$\bar{d}$ = Average demand rate
d. Variable lead time and demand	$ROP = \bar{d}\overline{LT} + z\sqrt{\overline{LT}\sigma_d^2 + \bar{d}^2\sigma_{LT}^2}$	(12–15)	σ_d = Standard deviation of demand rate z = Standard normal deviation $\overline{LT}$ = Average lead time σ_{LT} = Standard deviation of lead time
5. ROP shortages	$E(n) = E(z)\sigma_{dLT}$	(12–16)	$E(n)$ = Expected number short per cycle
a. Units short per cycle	$E(N) = E(n)\frac{D}{Q}$	(12–17)	$E(z)$ = Standardized number short
b. Units short per year			σ_{dLT} = Standard deviation of lead time demand
c. Annual service level	$SL_{annual} = 1 - \frac{E(z)\sigma_{dLT}}{Q}$	(12–19)	$E(N)$ = Expected number short per year SL_{annual} = Annual service level
6. Fixed interval	$Q = \bar{d}(OI + LT) + z\sigma_d\sqrt{OI + LT} - A$	(12–20)	OI = Time between orders A = Amount on hand at order time
7. Single period	$SL = \frac{C_s}{C_s + C_e}$	(12–21)	SL = Service level C_s = Shortage cost per unit C_e = Excess cost per unit

00036

CINEC CAMPUS
Beyond A Graduate

Faculty of Management and Social Sciences
Department of Logistics & Transport
BSc in International Transportation Management and Logistics
Course CODE: COM550

Year 2 Semester II

SEMESTER END EXAMINATION

Maritime Law – MLAW0331

- This paper consists of EIGHT questions on TWO (02) pages.
- Answer FIVE Questions including Question 01.
- Only non-programmable calculators are allowed.
- You may use appropriate graphs, diagrams, equation/s to prove or justify the answers.
- If you have any doubt as to the interpretation of the wording of a question, make your own decision, but clearly state it on the script.
- Write legibly

Date: 2020.09.15 Pass mark: 50% Time: 03 Hours

Question 01 (Compulsory)

What is meant by the terms?

(a) Flag state
(b) Port state (20 marks)

Question 02

Discuss the process of registering a merchant vessel? (20 marks)

Question 03

Discuss differences and responsibilities amongst between the following: (20 Marks)

(a) Ship owner
(b) disponent owner
(c) ship-management
(d) ship operator
(e) charter.

Question 04

When does general average and particular average apply? (20 marks)

CINEC CAMPUS
Beyond A Graduate

Faculty of Management and Social Sciences
Department of Logistics & Transport
BSc in International Transportation Management and Logistics
Course CODE: COM550

Question 05

How would you define the terms "Franchise- and Excesses" in the field of marine insurance? (20 marks)

Question 06

Discuss about a Note of Protest. (20 Marks)

Question 07

Give brief notes on: (20 Marks)

(a) Clean Bill of Lading:
(b) Soiled Bill of Lading
(c) Foul Bill of Lading

Question 08

Explain what "Clause Paramount" is? (20 Marks)

----------END OF THE QUESTION PAPER----------

Library

00037

CINEC CAMPUS
Beyond A Graduate

Faculty of Management and Social Sciences
Department of Logistics & Transport
BSc in International Transportation Management and Logistics
Course CODE: COM550

Year 2 Semester II

SEMESTER END EXAMINATION

Air Cargo and Passenger Transport – ACPT0305

- This paper consists of EIGHT questions on FOUR (04) pages.
- Answer FIVE Questions including Question 01.
- Only non-programmable calculators are allowed.
- You may use appropriate graphs, diagrams, equation/s to prove or justify the answers.
- If you have any doubt as to the interpretation of the wording of a question, make your own decision, but clearly state it on the script.
- Write legibly

Date: 2020.09.12 Pass mark: 50% Time: 03 Hours

Question 01: (Compulsory)

(a) Differentiate between narrow body and wide body aircraft. (03 Marks)
(b) Briefly explain the 3(three) axis of rotation of an aircraft. (06 Marks)
(c) List down 4(four) fuel components of block fuel. (02 Marks)
(d) Explain the weight buildup of an aircraft with the aid of a diagram. (06 Marks)
(e) Sri Lankan Airline's aircraft A320-232, registered 4RABG has the following weight build up. Assume aircraft operates in maximum structural loads for a flight from CMB to DXB. Using the information given below find fuel consumed for the flight.

MEW	DOW	MZFW	MLW	MTOW
40,250 kg	41,820 kg	62,500 kg	65,780 kg	72,500 kg

(03 Marks)

Question 02

(a) Explain the change in civil aviation management that occurred when the state functions were transferred into public corporations or limited liability companies with the use of a diagram. (10 Marks)

(b) Explain the EC Regulation 261 emphasizing on consumer rights related to flight delays, flight cancellations, denied boarding and delayed, lost or damaged baggage. (10 Marks)

Question 03

(a) Explain how codeshare agreements work with an example. (05 Marks)

(b) There are different business models in the airline industry. What are these business models? Identify the unique characteristics of these business models with examples of airlines for each model. (09 Marks)

(c) List down the phases of flight and briefly explain any 1(one) of the flight phases. (06 Marks)

Question 04

(a) An Air Service Agreement (ASA) is to be signed between Germany and India. Skyway Airways is an airline whose home state is Germany. Identify which freedom of air is given by each example. (06 Marks)

I.	A flight between Chennai (India) and Mumbai (India), flown by Skyway Airways.	
II.	A flight from Germany to India, flown by Skyway Airways	
III.	A flight between India and Russia, flown by Skyway Airways without operating to Germany.	
IV.	A flight from Germany to India and from India to Russia, flown by Skyway Airways.	
V.	A flight from Germany to Russia, flown by Skyway Airways, overflying India.	
VI.	A flight from France to India, through Germany flown by Skyway Airways.	

(b) Briefly explain the Chicago Convention. (05 Marks)

(c) What is meant by an open skies policy? Identify the benefits and drawbacks of an open skies policy. (09 Marks)

Question 05

(a) Explain each of the following with an example.
   (i) Hazard
   (ii) Consequence of a hazard
   (iii) Safety Risk (10 Marks)

(b) SHELL Model is widely used in the air transport industry to understand the human contribution to safety and to support the human operational performance necessary to achieve the system's production goals. Explain with examples the relationship of each element in the SHELL Model in the context of an airline. (10 Marks)

Question 06

(a) Briefly explain characteristics of air cargo with examples. (05 Marks)
(b) Explain what is an airway bill. (05 Marks)
(c) Differentiate between the air cargo business models of 'All cargo carriers' and 'Belly cargo carriers'. (10 Marks)

Question 07

Skyway airline is a major airline of Australia. The table depicts the passenger movements of the airline performed by the B777 aircraft of the airline with a seat capacity of 350 seats. Airline operates one flight daily to KUL originating from MEL.

Note: Consider a calendar month as 31 days

CINEC CAMPUS
Beyond A Graduate

Faculty of Management and Social Sciences
Department of Logistics & Transport
BSc in International Transportation Management and Logistics
Course CODE: COM550

Sector length	MEL-KUL (4500 Km)	
Sector	MEL-KUL	KUL-MEL
	Passengers	Passengers
APR	9600	10200
MAY	9000	9600
JUN	9900	9000
JUL	10200	9450
AUG	9600	9000

(a) What will be the ASK by Skyway airline in MEL-KUL for the month of **August** for **round trips**? (04 Marks)

(b) What will be the RPK by Skyway airline in MEL-KUL for the month of **August** for **round trips**? (04 Marks)

(c) What will be the passenger load factor by Skyway airline in MEL-KUL for the month of **August** for **round trips**? (02 Marks)

(d) Explain why a high load factor and high yield are not ideal indicators of an airlines success and profitability. (06 Marks)

(e) Briefly explain any 2(two) airport related performance indicators. (04 Marks)

Question 08

(a) Bizwiz Company Pvt. Ltd. is going to ship some cargo from Shanghai to Jakarta, Indonesia. The shipment consists of 06 boxes, each weighing 17 kg, and each measuring 25 x 55 x 75 cm. Find the chargeable weight. (05 Marks)

(b) Explain general commodity rate, Specific commodity rate and Classification Commodity rate. (09 Marks)

(c) Briefly explain 3(three) factors affecting air freight rates. (06 Marks)

----------END OF THE QUESTION PAPER----------

Library 00041

CINEC CAMPUS
Beyond A Graduate

Faculty of Management and Social Sciences
Department of Logistics & Transport
BSc in International Transportation Management and Logistics
Course CODE: COM550

Year 2 Semester II

SEMESTER END EXAMINATION

Shipping Management – SPMG0306

- This paper consists of EIGHT questions on TWO (02) pages.
- Answer FIVE Questions including Question 01.
- Only non-programmable calculators are allowed.
- You may use appropriate graphs, diagrams, equation/s to prove or justify the answers.
- If you have any doubt as to the interpretation of the wording of a question, make your own decision, but clearly state it on the script.
- Write legibly

Date: 2020.09.10 Pass mark: 50% Time: 03 Hours

Question 01 (Compulsory)

Give introductory notes to below:

(a) Multimodal Bill of Lading
(b) Through Bill of Lading
(c) Telex release
(d) Express release
(e) Releasing of a B/L (20 Marks)

Question 02

Discuss what "laytime" is, and how it is activated? (20 marks)

Question 03

Write down 10 points each with regard to transporting of goods requiring to be kept under cold and controlled temperatures by:

(a) "refer ships" and,
(b) "reefer containers"

(20 marks)

CINEC CAMPUS
Beyond A Graduate

Faculty of Management and Social Sciences
Department of Logistics & Transport
BSc in International Transportation Management and Logistics
Course CODE: COM550

Question 04

How does perishable items refrain without getting perished when cooled or refrigerated? (20 marks)

Question 05

(a) Give a brief introduction to what "Chartering" is?
(b) How would you decide what suits you from the following charter parties:

(i) VOYGE CHARTER
(ii) TIME CHARTER
(iii) BAREBOAT (OR DEMISE CHARTER) (LEASING)
(iv) LONGTERM CONTRACT OF AFFREIGHTMENT OR CONTRACT OF AFFRAIGHTMENT COA)

(20 marks)

Question 06

Express your understanding by the terms:

(a) Smuggling
(b) Piracy at sea
(c) Crew desertion (20 marks)

Question 07

Give an introduction to any existing distant rail transportation of containers.

(20 marks)

Question 08

Describe the following bills of lading:

(a) Received for shipment
(b) Clean
(c) Shipped
(d) Multimodal/Combined Transport

----------END OF THE QUESTION PAPER----------

Library.

CINEC CAMPUS
Beyond A Graduate

Faculty of Management and Social Sciences
Department of Logistics & Transport
BSc in International Transportation Management and Logistics
Course CODE: COM550

Year 2 Semester II

SEMESTER END EXAMINATION

Transport Economics – ECON0319

- This paper consists of EIGHT questions on FIVE (05) pages.
- Answer FIVE (05) Questions including Question 01.
- Only non-programmable calculators are allowed.
- You may use appropriate graphs, diagrams, equation/s to prove or justify the answers.
- If you have any doubt as to the interpretation of the wording of a question, make your own decision, but clearly state it on the script.
- Write legibly
- Use MCQ sheet provided with the paper to answer Question 01.

Date: 2020.09.08 Pass mark: 50% Time: 03 Hours

Question 01 (Compulsory)

1. The transport service is considered as,
   A. Social infrastructure
   B. Economic infrastructure
   C. Static infrastructure
   D. None of above

2. The modern vessels of today are a complicated piece of machinery and its construction requires a high level of expertise and coordination of many components. The coordination, innovation and management of the works are categorized under,

   A. Land
   B. Labor
   C. Capital
   D. Entrepreneurship.

Faculty of Management and Social Sciences
Department of Logistics & Transport
BSc in International Transportation Management and Logistics
Course CODE: COM550

3. The type of utility filled by transport and logistics,
   A. Time and form
   B. Form and possession
   C. Time and place
   D. Place and possession

Mr. Perera is a consultor, By taking an express luxury service he can travel from home to his office in one hour via Express way. The same trip takes 3 hours by normal bus. Luxury bus fare is 1000LKR and the normal bus fare is 300LKR. When Mr. Perera not travelling, can work and earn 2000LKR per hour. Answer question 4,5 and 6

4. The implicit cost for Mr. Perera of travelling by normal bus,
   A. 1000LKR
   B. 2000LKR
   C. 900LKR
   D. 6000LKR

5. The Explicit cost of travel by express way is,
   A. 1000LKR
   B. 2000LKR
   C. 900LKR
   D. 6000LKR

6. Opportunity cost for travel by Normal bus is,
   A. 6000LKR
   B. 2000LKR
   C. 6300LKR
   D. 6900LKR

CINEC CAMPUS
Beyond A Graduate

Faculty of Management and Social Sciences
Department of Logistics & Transport
BSc in International Transportation Management and Logistics
Course CODE: COM550

7. Which one of following is corrected,
   A. The implicit cost of travelling luxury bus is greater than normal bus.
   B. The opportunity cost of travelling normal bus is less than luxury bus via express way.
   C. Travel by luxury bus is the best option for Mr. Perera.
   D. None of above.

Table 1.1 : Elasticity co-efficient of Car Traffic.

	Elasticity
Car traffic with respect to car price	-1.4
Car traffic with respect to petrol price	-1.02
Car traffic with respect to Per Capita GDP	+2.5
Car traffic with respect to luxury bus ticket price	+0.5

Answer Questions 8,9 and 10 using above Table1.1

8. Traveling by car in this economy is considered as,
   A. An Inferior service for the customer
   B. A Luxury service for the consumer
   C. A merit services
   D. A demerit services
9. The cross-price elasticity between car traffic and luxury bus shows that,
   A. Weak complement relationship
   B. Strong substitute relationship
   C. Close substitute relationship
   D. Rear substitution relationship
10. Which one is incorrect statement,
   A. Car traffic is less sensitive for price than income of passengers.
   B. Car traffic is more sensitive for income than price of luxury bus fare.
   C. Price elasticity of Car traffic relatively inelastic.
   D. Consumers of car will be more response for change in income than change in price of the car.

(20 Marks)

CINEC CAMPUS
Beyond A Graduate

Faculty of Management and Social Sciences
Department of Logistics & Transport
BSc in International Transportation Management and Logistics
Course CODE: COM550

Question 02

(a) Explain that economic impacts of Easter Sunday Attacks on transport industry in 2019 with facts and figures. (10 Marks)

(b) Demand for transport is considered a Derived demand. justify impacts of Covid-19 on transport industry in Sri Lanka 2020. (10 Marks)

Question 03

(a) Demand for Rail transportation is depending on some factors. Justify your answer using appropriate examples. (08 Marks)

(b) Explain that importance of concept of demand elasticity for the pricing decision (12 Marks)

Question 04

(a) Explain the meaning of Transport supply? (04 Marks)

(b) What are the determinates of supply of transportation service in the economy? (06 Marks)

(c) What do mean by elasticity of transport supply? Explain factors which are determining the elasticity of supply with examples. (10 Marks)

Question 05

Price discrimination is the term used to describe a pricing policy in the transport industry, then explain that,

(a) What are the market conditions required for price discrimination? (04 Marks)

(b) What are the advantages of price discrimination? (06 Marks)

(c) What are the disadvantages of price discrimination? (06 Marks)

Faculty of Management and Social Sciences
Department of Logistics & Transport
BSc in International Transportation Management and Logistics
Course CODE: COM550

(d) Is price discrimination depending on relative elasticity of the services? Explain with a appropriate diagram (04 Marks)

Question 06

(a) The government intervenes to control the negative externalities in transport market through their economic policies. Justify your answer with appropriate examples and diagram/s. (12 Marks)

(b) Classify the cost of rail transportation (08 Marks)

Question 07

(a) Identify the factors that influence the supply of shipping and briefly explain them (08 Marks)

(b) Briefly explain the fundamental meaning of Surcharges or additional costs in shipping. Identify the key surcharges and explain each of them. (12 Marks)

Question 08

Write short notes on any four (4) of the followings.

(a) Utility and Price

(b) Factors of Production

(c) Low cost carries in airline industry.

(d) Factors considered for Economic forecasting

(e) Public Private partnership programme in Sri Lanka

(f) Financial appraisal in infrastructure development

(20 Marks)

----------END OF THE QUESTION PAPER----------

00019

EXAMINATION
8 SEP 2020
CINEC

CINEC CAMPUS
Beyond A Graduate

Faculty of Management and Social Sciences
Department of Logistics & Transport
BSc in International Transportation Management and Logistics
Course CODE: COM550

Transport Economics – ECON0319

MCQ Answer Sheet

- Cross (×) the relavant box according to your answer

Date: 2020.09.08 Pass mark: 50% Time: 03 Hours

Question 01

1. A B C D
2. A B C D
3. A B C D
4. A B C D
5. A B C D
6. A B C D
7. A B C D
8. A B C D
9. A B C D
10. A B C D

library 00003

Colombo International Nautical and Engineering College
CINEC Campus
Faculty of Management, Humanities and Social Sciences
Department of Logistics & Transport
BSc in International Transportation management and Logistics
Course CODE: COM550

Year 2 Semester II

REPEAT EXAMINATION

E-Commerce – ECOM0370

- This paper consists of EIGHT questions on THREE (03) pages.
- Answer FIVE Questions including Question 01.
- Only non-programmable calculators are allowed.
- You may use appropriate graphs, diagrams, equation/s to prove or justify the answers.
- If you have any doubt as to the interpretation of the wording of a question, make your own decision, but clearly state it on the script.
- Write legibly

Date: 2019.12.08 Pass mark: 50% Time: 03 Hours

Question 01 (Compulsory)

(a) Explain the term 'E Commerce Business Model'. (04 Marks)

(b) Name 8 Unique features of E Commerce Technology and briefly explain each. (16 Marks)

Question 02

(a) Write down **5 methods** of E commerce payment and briefly explain them. (10 Marks)

(b) Explain THREE qualities of B 2B Payment systems. (06 Marks)

(c) Write TWO Disadvantages of using Credit Cards for Online Transactions. (04 Marks)

00003

Question 03

(a) Explain the term" E Commerce". (03 Marks)

(b) Explain ' Client Server Computing' with an aid of a diagram. (06 Marks)

(c) Write 2 Advantages of using Social media in daily activities. (04 Marks)

(d) Discuss Four Layers of Hourglass Layered architecture using a diagram. (07 Marks)

Question 04

Write down 10 points which are used to consider when developing an Interactive E Commerce site. Explain each point briefly . (20 Marks)

Question 05

(a) Explain Software Development Life Cycle using a proper diagram..(09 Marks)

(b) Write FIVE considerations which you need to apply when conducting a Successful Interview with your client, In terms of gathering data for the proposed system. (05 Marks)

(c) Write 2 Organizing themes which are used for understanding E Commerce. (06 Marks)

Question 06

(a) What is E Commerce security? Explain . (06 Marks)

(b) Compare **Virus** and **Worms** according to it's functionality. Use 2 points. (04 Marks)

(c) Write 3 ways of protecting Individual privacy when accessing Internet. (06 Marks)

(d) Explain Encryption using a proper Diagram (04 Marks)

Question 07

(a) Explain the Term Ethics. (04 Marks)

(b) Describe 4 Basic Ethical concepts applied in Internet Behavior. (08 Marks)

(c) What is the goal of Intellectual Property Law? Explain. (02Marks)

(d) Describe THREE FTC's Fair Information Practices principles. (06Marks)

Question 08

Briefly explain following Key Concepts.

(a) Extranet

(b) Packet Switching

(c) PHP

(d) Value Proposition

(e) Web Server

(f) VPN

(g) TCP/IP

(h) E Business

(i) Web Portal

(j) Digital Certificate (2 *10 Marks)

----------END OF THE QUESTION PAPER----------

LIBRARY

Colombo International Nautical and Engineering College
CINEC Campus
Faculty of Management, Humanities & Social Sciences
Department of Logistics & Transport
BSc in International Transportation Management and Logistics
Course CODE: COM550

03

Year 2 Semester II

REPEAT EXAMINATION

Port Management – PORT0352

- This paper consists of EIGHT questions on TWO (02) pages.
- Answer FIVE Questions including Question 01.
- Only non-programmable calculators are allowed.
- You may use appropriate graphs, diagrams, equation/s to prove or justify the answers.
- If you have any doubt as to the interpretation of the wording of a question, make your own decision, but clearly state it on the script.
- Write legibly

Date: 2019.12.07 Pass mark: 50% Time: 03 Hours

Question 01 (Compulsory)

What is the importance of a seaport to the economy & describe the facilities that should be available in a modern/ideal seaport?

(20 marks)

Question 02

Why do you need to measure port performance? Explain the different types of performance measures.

(20 marks)

Question 03

What are the main factors considered by a Shipping Line / Ship Owner when selecting a port of call for their ships/services?

(20 marks)

Question 04

(a) Describe the four port management models (10 Marks)
(b) List and describe port reform modalities (10 Marks)

Question 05

What is port charges/tariff and explain the basis of port charges/tariff?

(20 Marks)

Question 06

Describe the Navigational Services provided by a seaport & powers of the Harbour Master?

(20 Marks)

Question 07

Describe the institution that manages Ports in Sri Lanka with its function and duties?

(20 Marks)

Question 08

Describe the management and container terminal handling facilities at

(a) JCT and UCT
(b) SAGT
(c) CICT

(20 Marks)

----------END OF THE QUESTION PAPER----------

EXAM JOURNAL
LIBRARY

Colombo International Nautical and Engineering College

CINEC Campus
Faculty of Management, Humanities & Social Sciences
Department of Logistics & Transport
BSc in International Transportation Management and Logistics
Course CODE: COM550

Year 2 Semester II

REPAT EXAMINATION

Maritime Law – MLAW0331

- This paper consists of EIGHT questions on TWO (02) pages.
- Answer FIVE Questions including Question 01.
- Only non-programmable calculators are allowed.
- You may use appropriate graphs, diagrams, equation/s to prove or justify the answers.
- If you have any doubt as to the interpretation of the wording of a question, make your own decision, but clearly state it on the script.
- Write legibly

Date: 2019.12.07 Pass mark: 50% Time: 03 Hours

Question 01 (Compulsory)

Explain your clear understanding on "Justifiable Deviation and Port of Refuge"
(20 marks)

Question 02

Briefly explain "Particular Average" and "General Average" in marine insurance.
(20 marks)

Question 03

Under circumstances giving rise to a Maritime Liens, discuss what is:

(a) Contractual Obligations (10 marks)
(b) Tortious Act (damage by collision) (10 marks)

Question 04

Give brief notes on:

(a) Clean Bill of Lading:
(b) Soiled Bill of Lading
(c) Foul Bill of Lading

(20 Marks)

Question 05

What is a switch bill of lading and how does it work in the International trade, is the switch bill of lading a fraudulent document? (20 Marks)

Question 06

Describe the following clauses you commonly find in C/Ps:

(a) Both to blame collision clause
(b) Clause Paramount

(20 Marks)

Question 07

How are marine losses categorized for the purpose of settling marine losses?

(20 marks)

Question 08

Give a brief explanation on what would it mean to you when the Master of a ships which arrived tells you that he needs to lodge note of protest?

(20 marks)

----------END OF THE QUESTION PAPER----------

LIBRARY.

Colombo International Nautical and Engineering College

CINEC Campus
Faculty of Management, Humanities & Social Sciences
Department of Logistics & Transport
BSc in International Transportation Management and Logistics
Course CODE: COM550

Year 2 Semester II

REPEAT EXAMINATION

Inventory and Warehouse Management – IWMG0348

- This paper consists of EIGHT questions on SIX (06) pages.
- Answer FIVE Questions including Question 01.
- Only non-programmable calculators are allowed.
- You may use appropriate graphs, diagrams, equation/s to prove or justify the answers.
- If you have any doubt as to the interpretation of the wording of a question, make your own decision, but clearly state it on the script.
- Write legibly

Date: 2019.12.06 Pass mark: 50% Time: 03 Hours

Question 01: (Compulsory)

(a) A mail-order house uses 18,000 boxes a year. Carrying costs are 60 cents per box a year, and ordering costs are $96. The following price schedule applies. Determine the optimal order quantity and the number of orders per year. (10 Marks)

Table 1:1 – Number of Boxes

Number of Boxes	Price per Box ($)
1000 to 1999	1.25
2000 to 4999	1.2
5000 to 9999	1.15
10000 or more	1.1

(b) Discuss 5 critical factors that the manufacturing firms should take into

00005

consideration when designing a warehouse operational system that can lead to a firm's meeting the objectives of maximizing production flow and minimizing the cost of investment.

(10 marks)

Question 02

A large bakery buys flour in 25 pound bags. The bakery uses an average of 4860 bags a year. Preparing an order and receiving a shipment of flour involves a cost of $10 per order. Annual carrying costs are $75 per bag.

(a) Determine the optimum order quantity which would minimize the sum of annual ordering and carrying costs. (05 Marks)

(b) How many orders per year will there be? (05 Marks)

(c) Compute the total annual cost of ordering and carrying flour. (05 Marks)

(d) If ordering costs were to increase by $1 per order, how much would that affect the minimum total annual cost? (05 Marks)

Question 03

(a) The house keeping section of a motel uses approximately 400 washcloths per day. The actual number tends to vary with the number of guests on any given night. Usage can be approximated by a normal distribution that has a mean of 400 and a standard deviation of 9 washcloths per day. A linen supply company delivers towels and washcloths with a lead time of three days. If the motel policy is to maintain a stock out risk of 2 percent, what is the minimum number of washcloths that must be on hand at reorder time, and how much of that amount can be considered safety stock?

(06 Marks)

(b) The motel in the proceeding example uses approximately 600 bars of soap each day, and this tends to be fairly constant. Lead time for soap delivery is normally distributed with a mean of six days and a standard deviation of two days. A service level of 90 percent is desired.

(i) Find the Re Order Point (ROP). (04 Marks)

(ii) How many days of supply are on hand at the ROP? (04 Marks)

(c) The motel replaces broken glasses at a rate of 25 per day. In the past, this quantity has tended to vary normally and have a standard deviation of 3 glasses per day. Glasses are ordered from a Cleveland supplier. Lead time is normally distributed with an average of 10 days and a standard deviation of 2 days. What ROP should be used to achieve a service level of 95 percent? (06 Marks)

Question 04

(a) A lab orders a number of chemicals from the same supplier every 30 days. Lead time is five days. The assistant manager of the lab must determine how much of one of these chemicals to order. A check of stock revealed that eleven 25 ml jars are on hand. Daily usage of the chemical is approximately normal with a mean of 15.2 ml per day and a standard deviation of 1.6 ml per day. The desired service level for this chemical is 95%.

(i) How many jars of the chemical should be ordered? (05 Marks)

(ii) What is the average amount of safety stock of the chemical? (05 Marks)

(b) A drugstore uses fixed-order cycles for many of the items it stocks. The manager wants a service level of 0.98. The order interval is 14 days, and lead time is 2 days. Average demand for one item is 40 units per day, and the standard deviation of

demand is 3 units per day. Determine the order quantities when on hand inventory is 42, 08 and 103. (10 Marks)

Question 05

(a) A large logistics firm uses an average of 40 boxes of copier paper a day. The firm operates 260 days a year. Storage and handling costs for the paper are $30 a year per box, and it costs approximately $60 to order and receive a shipment of paper.

(i) What order size would minimize the sum of annual ordering and carrying costs? (02 Marks)

(ii) Compute the total annual cost using your order size from part (a) (03 Marks)

(iii) The office manager is currently using an order size of 200 boxes. The partners of the firm expect the office to be managed "in a cost-efficient manner." Would you recommend that the office manager use the optimal order size instead of 200 boxes? Justify your answer. (05 Marks)

(b) A distributor for a tire company expects to sell 9,600 steel-belted radial tires of a certain size and tread design next year. Annual carrying cost is Rs. 16 per tire, and ordering cost is Rs. 75. The distributor operates 288 days a year.

(i) What is the EOQ? (02 Marks)

(ii) How many times per year does the store reorder? (02 Marks)

(iii) What is the length of an order cycle? (03 Marks)

(iv) What is the total annual cost if the EOQ quantity is ordered? (03 Marks)

Question 06

(a) What are the advantages and disadvantages of private warehousing?

(05 marks)

(b) Discuss why contract warehousing is becoming the preferred alternative for many organizations.

(07 marks)

(c) Explain how warehousing managers can attempt to control pilferage.

(08 marks)

Question 07

(a) List down 05 warehouse management system (WMS) available on warehousing industry. (05 Marks)

(b) Briefly explain warehouse management system (WMS) functions and features how impact to the warehouse efficiency. (07 Marks)

(c) ABC distribution center Inbound, and Outbound operation information given below table, based on below information's calculate.

(i) Receiving rate per hour. (04 marks)

(ii) Picking rate per hour. (04 marks)

	Volume (Cases)	Number of labors	Time taken to complete (hrs.)	Ideal Time (hrs.)
Inbound	25000	5	10	1.5
Picking	38000	24	12.5	2.5

Note:
Receiving rate = Volume/ [(Number of labours * (Time taken to complete – Ideal Time)]
Picking rate = Volume/ [(Number of labours * (Time taken to complete – Ideal Time)]

Question 08

(a) List down 05 Personal protection equipment (PPE) use in the warehousing. (05 marks)

(b) Discuss any five of the value-added activities that can be performed by warehouses and distribution centers. (07 marks)

(c) Distinguish between warehouses and distribution centers. (08 marks)

----------END OF THE QUESTION PAPER----------

library

Colombo International Nautical and Engineering College
CINEC Campus
Faculty of Management, Humanities & Social Sciences
Department of Logistics & Transport
BSc in International Transportation Management and Logistics
Course CODE: COM550

Year 2 Semester II

REPEAT EXAMINATION

Shipping Management – SPMG0306

- This paper consists of EIGHT questions on TWO (02) pages.
- Answer FIVE Questions including Question 01.
- Only non-programmable calculators are allowed.
- You may use appropriate graphs, diagrams, equation/s to prove or justify the answers.
- If you have any doubt as to the interpretation of the wording of a question, make your own decision, but clearly state it on the script.
- Write legibly

Date: 2019.12.05 Pass mark: 50% Time: 03 Hours

Question 01 (Compulsory)

(a) Define and give an introduction to Dangerous goods.
(b) How are dangerous goods classed by IMO?
(c) Give 2 examples of substances to each IMDG classed cargo that you are likely to find in your home.

(20 marks)

Question 02

Discuss the pros & cons of having appointed separate agents for husbanding issues, port and cargo issues.

(20 marks)

Question 03

Give short introductions to following:

- Hague rules
- Hague Visby rues
- Hamburg rules
- Rotterdam rules

(20 Marks)

Question 04

Explain the functions of a B/L elaborated with short expletory notes to each.

(20 Marks)

Question 05

Explain are cargo and freight dangerous goods manifests.

(20 marks)

Question 06

What are common and private carriers?

(20 Marks)

Question 07

Discuss how to deal with OOG cargoes: (20 Marks)

Question 08

How does perishable items refrain without getting perished when cooled or refrigerated? (20 marks)

----------END OF THE QUESTION PAPER----------

library

Colombo International Nautical and Engineering College

CINEC Campus

Faculty of Management, Humanities & Social Sciences

Department of Logistics & Transport

BSc in International Transportation Management and Logistics

Course CODE: COM550

Year 2 Semester II

REPAT EXAMINATION

Transport Economics – ECON0319

- This paper consists of EIGHT questions on THREE (03) pages.
- Answer FIVE (05) Questions including Question 01.
- Only non-programmable calculators are allowed.
- You may use appropriate graphs, diagrams, equation/s to prove or justify the answers.
- If you have any doubt as to the interpretation of the wording of a question, make your own decision, but clearly state it on the script.
- Write legibly

Date: 2019.12.03 Pass mark: 50% Time: 03 Hours

Question 01 (Compulsory)

Table 1.1 : Elasticity co-efficient of Car Traffic. Write a report on bellow figures.

	Short run	Long run
Car traffic with respect to price	-0.16	-1.2
Car traffic with respect to petrol price	-2	-5
Car traffic with respect to Per Capita GDP	+0.75	+1.5
Car traffic with respect to public bus ticket price	+0.5	+1.02

(20 marks)

Question 02

(a) What do you mean by Transport Demand? (04 Marks)

(b) Explain the relationship between utility and price. (06 Marks)

(c) "well – functioning transport sector is essential for economy to be efficient" discuss (10 Marks)

Question 03

(a) Demand for the transportation is depend on some factors. Justify your answer using appropriate examples. (10 Marks)

(b) Explain that relationship between producers' revenue and the elasticity of demand

(10 Marks)

Question 04

(a) Which factors influence to the supply of logistics services in the economy?

(10 Marks)

(b) What do mean by elasticity of transport supply? Explain factors which are determining the elasticity of supply with examples. (10 Marks)

Question 05

Explain that second degree price discrimination and third-degree price discrimination in transport and logistics field. (20 Marks)

Question 06

Explain that the way of dealing with externalities in the transport industry with appropriate examples (20 Marks)

Question 07

(a) Explain derived demand complexities in Shipping (05 Marks)
(b) Discuss decisive factors in setting a freight rate in sea transport (10 Marks)
(c) What are the Surcharges associated in sea freight charges? (05 Marks)

Question 08

Write short notes on any four (4) of the followings.

(a) Transport Supply.
(b) Law cost carriers in airline
(c) Cost structure in a railway industry
(d) Cross price elasticity in transport market.
(e) Measurements of productivity in airline industry.
(f) Product differentiation (20 Marks)

----------END OF THE QUESTION PAPER----------

Library

Colombo International Nautical and Engineering College
CINEC Campus
Faculty of Management, Humanities and Social Sciences
Department of Logistics & Transport
BSc in Logistics and Transportation
Course CODE: COM551

00038

Year 2 Semesters I

SEMESTER END EXAMINATION

Financial Management LTFM2201

- This paper consists of SEVEN questions on ELEVEN (11) pages.
- Answer FOUR questions including question 01.
- Only non-programmable calculators are allowed.
- You may use appropriate graphs, diagrams, equation/s to prove or justify the answers.
- If you have any doubt as to the interpretation of the wording of a question, make your own decision, but clearly state it on the script.
- Write legibly.

Date:2019.09.11 Pass mark: 50% Time: 02 Hours

Question 01 (COMPULSORY)

Company LB owns a number of motor vehicle retail showrooms in its home country, Country H (The currency of the country is H$). It has grown rapidly in recent years, largely by acquiring land and building new showrooms.

The directors of LB are currently considering a number of possible new sites for further expansion. One or more of these sites may be developed up to a maximum overall capital budget of H$ 100 million. One of the sites being considered is located in a neighbouring country, Country J (Currency of that country is J$). If selected, this would be the first showroom to be opened in a foreign country.

Four possible sites have been identified and the data are given below

Table 1.01

Project (Local Projects)	Initial Investment	net cash inflow **at the end of each year** for a 10-year period	Project net present value (NPV)	payback period (Without discounting)	Profitability index
	H$ Million	H$ Million	H$ Million	Years	
A	50	12	25.35	**To be calculated**	**To be calculated**
B	100	20	25.58	**To be calculated**	**To be calculated**
C	75	15	19.18	**To be calculated**	**To be calculated**
Foreign Project (To be started in Country J)	Initial Investment (J$ Million)	net cash inflow **at the end of each year** for a 10-year period (J$ Million)	Project net present value (NPV)	payback period (Without discounting)	Profitability index
D	80	20	**To be calculated**	4 Years	**To be calculated**

Note that projects A, B and C are located in LB's home country, Country H and project D is located in neighbouring Country J.

Additional data,

- Local projects are discounted based on the rate of 9.5%
- The risk-free interest rate is 2% in Country H and 4% in Country J.
- The spot rate is currently H$/J$ 2.2900 (that is, H$ 1 = J$ 2.2900)
- Each project has a 10-year term

A separate decision has yet to be made about how best to finance the selected project or projects.

Required,

(i) Calculate the payback period and Profitability indexes for all three local projects (05 Marks)

(ii) An appropriate **discount rate** to use in calculating the Net Present Value (NPV) of project D (05 Marks)

(iii) Calculate project D's NPV stated in terms of H$. (Hint: use any option you prefer) (08 Marks)

(iv) Profitability index for Project D (02 Marks)

(v) Advise the directors of LB on: The project or combination of projects which is expected to maximize shareholder wealth (Hint : There is a capital rationing situation) (05 Marks)

Question 02

E is a company engaged in manufacturing of Fast-moving consumer goods is now considering buying a new machine. Here is the additional information related to the project.

- The machine costs $800.
- Over the next eight years (the life of the machine) the machine will generate annual sales of $1,000.
- The annual cost of the goods sold (COGS) is $400 per year and other costs such as selling, general, and administrative expenses (SG&A) are $300 per year.
- Depreciation on the machine is straight-line over 8 years (that is, $100 per year).
- At the end of eight years, the machine's salvage value (or terminal value) is zero.
- The firm's tax rate is 40%.
- The firm's discount rate for projects of this kind is 15%.

(a) Should the firm buy the machine? Calculate Net Present value and provide your decision. (20 Marks)

(b) Clearly explain the drawbacks of following investment appraisal techniques

(i) Payback period

(ii) Accounting Rate of return

(iii) Net present Value (05 Marks)

Question 03

(a) "A **financial intermediary** is an entity that acts as the middleman between two parties in a **financial** transaction". clearly explain the importance of the facilitation of financial intermediaries with appropriate examples (06 Marks)

(b) "Aligning the interests between owners and the managers will lead to minimize the principal agent problem". Clearly explain the short term and the long-term strategies to be taken to minimize the principal agent problem (06 Marks)

(c) Clearly explain the determinants of dividend decision to be taken by a financial manager in an organization (06 Marks)

(d) Clearly explain the relationship between Investment decisions and Financing decisions as main two financial management decisions (07 Marks)

Question 04

(a) "The importance of the concept of time value of money is influenced on consumers today than in any other time period, in Sri Lanka". Do you agree with the statement? Argue on that. (05 Marks)

(b) Mr. Balan is expecting to buy a car. There are two options of which he can make the payment
Option 1: Paying total sum today, worth RS 2,500,000
Option 2: Paying RS 60,000 per month for 5 years.
If Interest rate is 12% and is compounded monthly, clearly indicate which option is better for Mr. Balan in terms of paying for the car. (05 Marks)

(c) Mr. Ranmal took a mortgage loan to finance the purchase of his house for RS 5,000,000 to be repaid in ten semiannual installments. The annual nominal interest rate is 10% which is compounded semiannually.

(i) Compute the semiannual installment (2.5 Marks)

(ii) Calculate the interest and the principle payments at the end of first year (at the end of the payment of 02nd installment) (2.5 Marks)

(d) Mr. Donald is expecting to invest RS 100,000 in his bank account today. Calculate how long will it take to increase his initial investment up to RS 500,000 under an annual interest of 10% (05 Marks)

(e) Ms. Udani invested RS 50,000 today for her new project on floral decorations. If the annual cash flow at the end of each year due to this project is RS 10,000 spread for an indefinite period of time, calculate the Net Present value of the project (Assume the discount rate as 10%) (05 Marks)

Question 05

(a) Mr. Madhawa has purchased 100 shares from dialog PLC as at 01st of January 2018 at Rs 11 per share. As at 30th April 2018 he sold his shares for RS 1500. During the holding period, the company paid RS 250 as total amount of dividends.

(i) Calculate the total gain as a percentage (2.5 Marks)

(ii) Calculate the annualized return as a percentage (2.5 Marks)

(b) The returns of stocks X and Y under different Economic conditions are as follows.

Table 5.01

Economic condition	Probability	Returns of X (%)	Returns of Y (%)
Growth	0.5	20	22
Normal	0.3	15	15
Recession	0.2	10	05

(i) Calculate the expected return and the standard deviation of each stock (07 Marks)

(ii) If you are to select one stock for investment, what would you choose? Justify your answer (03 Marks)

(c) suppose an investor has a portfolio of two common stocks A and B in equal proportions with the following risk and return characteristics

- Expected return of A (ER_A) = 18%
- Expected return of B (ER_B) = 28%

- Standard Deviation of A (STD_A) = 15%
- Standard Deviation of A (STD_B) = 20%
- Returns of these stocks have a negative correlation of -0.2

(i) Calculate the expected return of the portfolio (05 Marks)
(ii) Calculate the expected risk (Standard Deviation) of the Portfolio (05 Marks)

Question 06

(a) Clearly explain the factors affecting on a company's capital structure with appropriate examples (08 Marks)

(b) A newly established company has determined its capital structure as follows.
Table 6.01

Common shares (10,000 shares)	RS 1,000,000
Preference shares	RS 500,000
Debentures at 12% interest	RS 1,200,000

- The annual dividend per common share is expected to be RS 8 per share and there will be a 5% growth rate of dividend. The market price per share is RS 120.
- The market price of a preference share is RS 50. Company is expecting to pay a RS 5 dividend per share.
- Tax rate is expected to be 25%.

Required,
Calculate the Weighted average cost of capital of the company (10 Marks)

(c) The Financial Manager of Demo (PLC), engaged in manufacturing spare parts has found following information on its fixed costs, variable costs and sales revenue.
Table 6.02

Sales revenue	RS 800,000
Variable Operating expenses	RS 400,000
Fixed operating expenses	RS 200,000
Earnings before Interest and Tax (EBIT)	.....

Required,

Calculate the operating leverage of the company if the sales revenue will be reduced by 10% due to the reduction of demand for spare parts. (Assume variable costs are also changing with the change of sales revenue) (04 Marks)

(d) Clearly explain on how operating leverage will be influencing on the decisions taken by the financial manager. (03 Marks)

Question 07

(a) LT (Pvt) ltd is a company engaged in Logistics operations in Sri Lanka. They are planning to construct a new plant in Belihuloya in Rathnapura District. The cost of the new project is expected to be RS 500 million. The financial manager plans for acquiring funds for the new project as follows.

Plan 01 – collect the total funds through Equity. (The expected number of shares to be issued is 50 million)

Plan 02 – Collect the RS 200 Million through Equity (The expected number of shares to be issued is 20 million) and collect remaining through debt with an interest rate of 8%.

The tax rate of the company is 35%. The expected earnings before interest and tax of the company is RS 50 million through this project and the existing branches of company are smoothly running their operations.

(i) Calculate the earnings per share under each plan. (05 Marks)
(ii) Calculate the indifferent point of EBIT (05 Marks)
(iii) By using an appropriate graph, indicate which plan is the best for acquiring funds for LT (Pvt) ltd to run the project. (08 Marks)

(b) ASB (Pvt) Ltd is a fashionable clothing retailer in Sri Lanka. The budgeted sales of Kids T- Shirts for the first four months in the next year (2020) are given as follows.
Table 7.01

	January	February	March	April
Sales (T – Shirts)	3000	4000	5000	6000

Other relevant data:

- The selling price of a T - shirt is RS 1250
- To produce one T- Shirt, 1.5 Meters of clothing are required.
- The target month end finished products inventory is 25% of budgeted next month sales
- End Finished products inventory for December 2019 is expected as 1500 T - shirts

Required: Prepare the following budgets for the first 3 months of the next year

(i) Sales revenue budget (3.5 Marks)
(ii) Production Budget (Units) (3.5 Marks)

----------END OF THE QUESTION PAPER----------

Present Value Table

Present value of 1 i.e. $(1 + r)^{-n}$

Where r = discount rate
n = number of periods until payment

Discount rate (r)

Periods (n)	1%	2%	3%	4%	5%	6%	7%	8%	9%	10%	
1	0·990	0·980	0·971	0·962	0·952	0·943	0·935	0·926	0·917	0·909	1
2	0·980	0·961	0·943	0·925	0·907	0·890	0·873	0·857	0·842	0·826	2
3	0·971	0·942	0·915	0·889	0·864	0·840	0·816	0·794	0·772	0·751	3
4	0·961	0·924	0·888	0·855	0·823	0·792	0·763	0·735	0·708	0·683	4
5	0·951	0·906	0·863	0·822	0·784	0·747	0·713	0·681	0·650	0·621	5
6	0·942	0·888	0·837	0·790	0·746	0·705	0·666	0·630	0·596	0·564	6
7	0·933	0·871	0·813	0·760	0·711	0·665	0·623	0·583	0·547	0·513	7
8	0·923	0·853	0·789	0·731	0·677	0·627	0·582	0·540	0·502	0·467	8
9	0·914	0·837	0·766	0·703	0·645	0·592	0·544	0·500	0·460	0·424	9
10	0·905	0·820	0·744	0·676	0·614	0·558	0·508	0·463	0·422	0·386	10
11	0·896	0·804	0·722	0·650	0·585	0·527	0·475	0·429	0·388	0·350	11
12	0·887	0·788	0·701	0·625	0·557	0·497	0·444	0·397	0·356	0·319	12
13	0·879	0·773	0·681	0·601	0·530	0·469	0·415	0·368	0·326	0·290	13
14	0·870	0·758	0·661	0·577	0·505	0·442	0·388	0·340	0·299	0·263	14
15	0·861	0·743	0·642	0·555	0·481	0·417	0·362	0·315	0·275	0·239	15

(n)	11%	12%	13%	14%	15%	16%	17%	18%	19%	20%	
1	0·901	0·893	0·885	0·877	0·870	0·862	0·855	0·847	0·840	0·833	1
2	0·812	0·797	0·783	0·769	0·756	0·743	0·731	0·718	0·706	0·694	2
3	0·731	0·712	0·693	0·675	0·658	0·641	0·624	0·609	0·593	0·579	3
4	0·659	0·636	0·613	0·592	0·572	0·552	0·534	0·516	0·499	0·482	4
5	0·593	0·567	0·543	0·519	0·497	0·476	0·456	0·437	0·419	0·402	5
6	0·535	0·507	0·480	0·456	0·432	0·410	0·390	0·370	0·352	0·335	6
7	0·482	0·452	0·425	0·400	0·376	0·354	0·333	0·314	0·296	0·279	7
8	0·434	0·404	0·376	0·351	0·327	0·305	0·285	0·266	0·249	0·233	8
9	0·391	0·361	0·333	0·308	0·284	0·263	0·243	0·225	0·209	0·194	9
10	0·352	0·322	0·295	0·270	0·247	0·227	0·208	0·191	0·176	0·162	10
11	0·317	0·287	0·261	0·237	0·215	0·195	0·178	0·162	0·148	0·135	11
12	0·286	0·257	0·231	0·208	0·187	0·168	0·152	0·137	0·124	0·112	12
13	0·258	0·229	0·204	0·182	0·163	0·145	0·130	0·116	0·104	0·093	13
14	0·232	0·205	0·181	0·160	0·141	0·125	0·111	0·099	0·088	0·078	14
15	0·209	0·183	0·160	0·140	0·123	0·108	0·095	0·084	0·074	0·065	15

Annuity Table

Present value of an annuity of 1 i.e. $\frac{1-(1+r)^{-n}}{r}$

Where r = discount rate
n = number of periods

Discount rate (r)

Periods (n)	1%	2%	3%	4%	5%	6%	7%	8%	9%	10%	
1	0·990	0·980	0·971	0·962	0·952	0·943	0·935	0·926	0·917	0·909	1
2	1·970	1·942	1·913	1·886	1·859	1·833	1·808	1·783	1·759	1·736	2
3	2·941	2·884	2·829	2·775	2·723	2·673	2·624	2·577	2·531	2·487	3
4	3·902	3·808	3·717	3·630	3·546	3·465	3·387	3·312	3·240	3·170	4
5	4·853	4·713	4·580	4·452	4·329	4·212	4·100	3·993	3·890	3·791	5
6	5·795	5·601	5·417	5·242	5·076	4·917	4·767	4·623	4·486	4·355	6
7	6·728	6·472	6·230	6·002	5·786	5·582	5·389	5·206	5·033	4·868	7
8	7·652	7·325	7·020	6·733	6·463	6·210	5·971	5·747	5·535	5·335	8
9	8·566	8·162	7·786	7·435	7·108	6·802	6·515	6·247	5·995	5·759	9
10	9·471	8·983	8·530	8·111	7·722	7·360	7·024	6·710	6·418	6·145	10
11	10·37	9·787	9·253	8·760	8·306	7·887	7·499	7·139	6·805	6·495	11
12	11·26	10·58	9·954	9·385	8·863	8·384	7·943	7·536	7·161	6·814	12
13	12·13	11·35	10·63	9·986	9·394	8·853	8·358	7·904	7·487	7·103	13
14	13·00	12·11	11·30	10·56	9·899	9·295	8·745	8·244	7·786	7·367	14
15	13·87	12·85	11·94	11·12	10·38	9·712	9·108	8·559	8·061	7·606	15
(n)	11%	12%	13%	14%	15%	16%	17%	18%	19%	20%	
1	0·901	0·893	0·885	0·877	0·870	0·862	0·855	0·847	0·840	0·833	1
2	1·713	1·690	1·668	1·647	1·626	1·605	1·585	1·566	1·547	1·528	2
3	2·444	2·402	2·361	2·322	2·283	2·246	2·210	2·174	2·140	2·106	3
4	3·102	3·037	2·974	2·914	2·855	2·798	2·743	2·690	2·639	2·589	4
5	3·696	3·605	3·517	3·433	3·352	3·274	3·199	3·127	3·058	2·991	5
6	4·231	4·111	3·998	3·889	3·784	3·685	3·589	3·498	3·410	3·326	6
7	4·712	4·564	4·423	4·288	4·160	4·039	3·922	3·812	3·706	3·605	7
8	5·146	4·968	4·799	4·639	4·487	4·344	4·207	4·078	3·954	3·837	8
9	5·537	5·328	5·132	4·946	4·772	4·607	4·451	4·303	4·163	4·031	9
10	5·889	5·650	5·426	5·216	5·019	4·833	4·659	4·494	4·339	4·192	10
11	6·207	5·938	5·687	5·453	5·234	5·029	4·836	4·656	4·486	4·327	11
12	6·492	6·194	5·918	5·660	5·421	5·197	4·988	4·793	4·611	4·439	12
13	6·750	6·424	6·122	5·842	5·583	5·342	5·118	4·910	4·715	4·533	13
14	6·982	6·628	6·302	6·002	5·724	5·468	5·229	5·008	4·802	4·611	14
15	7·191	6·811	6·462	6·142	5·847	5·575	5·324	5·092	4·876	4·675	15

Formula sheet

1) Present Value of a single Cash flows

PV = FV (1+r) $^{-n}$

2) Future value of present cash flows

FV = PV (1+r) ^{n}

3) Present value of an ordinary annuity

PV = Cash Flow * $\left(\frac{1-(1+r)^{-n}}{r} \right)$

4) Future value of an ordinary annuity

PV = Cash Flow * $\left(\frac{(1+r)^{n}-1}{r} \right)$

5) Expected Return

$$E(R) = \sum_{i=1}^{n} R_i P_i$$

6) Expected Risk of an individual asset

$$\sigma^2 = \sum_{i=1}^{n} [R_i - E(R)]^2 P_i$$

7) Expected Risk of a portfolio

$$\sigma_P^2 = W_1^2 \sigma_1^2 + W_2^2 \sigma_2^2 + 2 W_1 W_2 Cov_{1,2}$$

8) Covariance between two assets

$$\sigma_{x,y} = \sum_{i=1}^{n} [R_x - E(R_x)][R_y - E(R_y)] P_i$$

9) Market Risk

$$\beta_i = \frac{Cov_{i,m}}{\sigma_m^2}$$

LIBRARY

Colombo International Nautical and Engineering College

CINEC Campus
Faculty of Management, Humanities & Social Sciences
Department of Logistics & Transport
BSc in International Transportation Management and Logistics
Course CODE: COM550

Year 2 Semester II

SEMESTER END EXAMINATION

Shipping Management – SPMG0306

- This paper consists of EIGHT questions on TWO (02) pages.
- Answer FIVE Questions including Question 01.
- Only non-programmable calculators are allowed.
- You may use appropriate graphs, diagrams, equation/s to prove or justify the answers.
- If you have any doubt as to the interpretation of the wording of a question, make your own decision, but clearly state it on the script.
- Write legibly

Date: 2018.09.14 Pass mark: 50% Time: 03 Hours

Question 01 (Compulsory)

Write down 10 points each with regard to transporting of goods requiring to be kept under cold and controlled temperatures by:

(a) "refer ships" and,
(b) "reefer containers" (20 Marks)

Question 02

Give an introductory explanation in brief to sea transportation with special emphasis to contract of carriage.

(20 Marks)

Question 03

What is meant by following notations in Bills of Lading:

- Received for shipment bill of lading
- Shipped on board bill of lading
- Clean bill of lading
- Claused bill of lading (20 Marks)

CINEC MARITIME CAMPUS
Not To Be Taken Away Without Proper Authorization
LIBRARY

Question 04

Discuss in detail the following:

- B/L
- C/P

(20 Marks)

Question 05

Give short introductions to following:

- Hague rules
- Hague Visby rues
- Hamburg rules
- Rotterdam rules

(20 Marks)

Question 06

Discuss about the certificates a ship should be in possess of along with their importance.

(20 Marks)

Question 07

Explain your understanding about what a Classification Sociality is in relation to the maritime and shipping industry?

(20 Marks)

Question 08

(a) Explain the Transport & Logistics background of Sri Lanka and why shipping is more appropriate in that scenario (10 Marks)

(b) Explain the evolution of container shipping. Why container shipping is more suitable for Sri Lanka (10 Marks)

----------END OF THE QUESTION PAPER----------

LIBRARY COPY

Colombo International Nautical and Engineering College
CINEC Campus
Faculty of Management, Humanities & Social Sciences
Department of Logistics & Transport
BSc in International Transportation Management and Logistics
Course CODE: COM550

33

Year 2 Semester II

SEMESTER END EXAMINATION

Port Management – PORT0352

CINEC MARITIME CAMPUS Not To Be Taken Away Without Proper Authorization LIBRARY

- This paper consists of EIGHT questions on TWO (02) pages.
- Answer FIVE Questions including Question 01.
- Only non-programmable calculators are allowed.
- You may use appropriate graphs, diagrams, equation/s to prove or justify the answers.
- If you have any doubt as to the interpretation of the wording of a question, make your own decision, but clearly state it on the script.
- Write legibly

Date: 2019.09.09 Pass mark: 50% Time: 03 Hours

Question 01 (Compulsory)

What is a Sea Port & list out all Port facilities? (20 Marks)

Question 02

What are the Commercial Sea Ports in Sri Lanka & describe port services/facilities of each Port? (20 Marks)

Question 03

(a) Why measure port performance? (10 Marks)

(b) What are the types of port performance measures? (10 Marks)

Question 04

Describe Sri Lanka Ports Authority including its functions, powers & duties? (20 Marks)

Question 05

List and describe modern port related value added logistic services? (20 Marks)

Question 06

(a) Describe service port marketing and list out marketing tools to promote the port? (10 Marks)

(b) Who are the port customers & list out their expectations (10 Marks)

Question 07

(a) List out Main Tariff Items of Sri Lanka Ports Authority Tariff? (10 Marks)

(b) What are the container terminals in the Port of Colombo and list terminal facilities? (10 Marks)

Question 08

What are the navigational services & facilities that should be available in a modern port? (20 Marks)

----------END OF THE QUESTION PAPER----------

library

Colombo International Nautical and Engineering College

CINEC Campus
Faculty of Management, Humanities & Social Sciences
Department of Logistics & Transport
BSc in International Transportation Management and Logistics
Course CODE: COM550

Year 2 Semester II

SEMESTER END EXAMINATION

Inventory and Warehouse Management – IWMG0348

CINEC MARITIME CAMPUS

- This paper consists of EIGHT questions on SIX (06) pages.
- Answer FIVE Questions including Question 01.
- Only non-programmable calculators are allowed.
- You may use appropriate graphs, diagrams, equation/s to prove or justify the answers.
- If you have any doubt as to the interpretation of the wording of a question, make your own decision, but clearly state it on the script.
- Write legibly
- Supporting documents are attached

Date: 2019.09.06 Pass mark: 50% Time: 03 Hours

Question 01: (Compulsory)

(a) A jewelry firm buys semiprecious stones to make bracelets and rings. The supplier quotes a price of $8 per stone for quantities of 600 stones or more, $9 per stone for orders of 400 to 599 stones, and $10 per stone for lesser quantities. The jewelry firm operates 200 days per year. Usage rate is 25 stones per day and ordering costs are $48.

(i) If carrying costs are $2 per year for each stone, find the order quantity that will minimize total annual cost. (05 Marks)

(ii) If annual carrying costs are 30% of unit cost, what is the optimal order size? (05 Marks)

(b) The ABC warehouse providing services for sri lankan leading supermarket chain. Using below information calculate basic KPI's on ABC warehouse.

Total inbound volume 21000 cases.

	# Receivers	# cases	Starting time	End time
Dock 01	1	6750	07.30 AM	06.00PM
Dock 02	1	4250		
Dock 03	1	3800		
Dock 04	1	6200		

Note: 01-hour lunch and 30 min tea brake including on above window time period.

(i) Calculate the receiving rate with ideal time? (03 marks)

(ii) Calculate the receiving rate without ideal time? (03 marks)

Total Outbound Volume 18,000 cases and # pickers use for operation 12. Picking start at 07.30AM and 06.00PM.

(i) Calculate the Picking rate? (04 Marks)

Question 02

(a) A chemical firm produces sodium bisulfate in 100-pound bags. Demand for this product is 20 tons per day. The capacity for producing the product is 50 tons per day. Setup costs $100, and storage and handling costs are $5 per ton a year. The firm operates 200 days a year. (Note: 1 ton = 2,000 pounds)

(i) How many bags per run are optimal? (04 Marks)

(ii) Determine the approximate length of a production run, in days. (03 Marks)

(iii) About how many runs per year would there be? (03 Marks)

(iv) How much could the company save annually if the setup cost could be reduced to $25 per run? (04 Marks)

(b) A food processor uses approximately 27,000 glass jars a month for its fruit juice product. Because of storage limitations, a lot size of 4,000 jars has been used. Monthly holding cost is 18 cents pe jar, and reordering cost is $60 per order. The

company operates an average of 20 days a month. What penalty is the company incurring by its present order size? (06 Marks)

Question 03

(a) Suppose that the manager of a construction supply house determined from historical records that demand for sand during lead time averages 50 tons. In addition, suppose the manager determined that demand during lead time could be described by a normal distribution that has a mean of 50 tons and a standard deviation of 5 tons. Answer these questions, assuming that the manager is willing to accept a stockout risk of no more than 3 percent:

(i) What value of z is appropriate? (02 Marks)

(ii) How much safety stock should be held? (06 Marks)

(iii) What recorder point should be used? (06 Marks)

(b) The house keeping section of a motel uses approximately 400 washcloths per day. The actual number tends to vary with the number of guests on any given night. Usage can be approximated by a normal distribution that has a mean of 400 and a standard deviation of 9 washcloths per day. A linen supply company delivers towels and washcloths with a lead time of three days. If the motel policy is to maintain a stock out risk of 2 percent, what is the minimum number of washcloths that must be on hand at reorder time, and how much of that amount can be considered safety stock? (06 Marks)

Question 04

(a) A lab orders a number of chemicals from the same supplier every 30 days. Lead time is five days. The assistant manager of the lab must determine how much of one of these chemicals to order. A check of stock revealed that eleven 25 ml jars are on hand. Daily usage of the chemical is approximately normal with a mean of 15.2 ml per day and a standard deviation of 1.6 ml per day. The desired service level for this chemical is 95%.

(i) How many jars of the chemical should be ordered? (05 Marks)

(ii) What is the average amount of safety stock of the chemical? (05 Marks)

(b) A drugstore uses fixed-order cycles for many of the items it stocks. The manager wants a service level of 0.98. The order interval is 14 days, and lead time is 2 days. Average demand for one item is 40 units per day, and the standard deviation of demand is 3 units per day. Determine the order quantities when on hand inventory is 42, 08 and 103. (10 Marks)

Question 05

(a) The manager of a store that sells office supplies has decided to set an annual service level of 96 percent for a certain model of telephone answering equipment. The store sells approximately 300 of this model a year. Holding cost is \$5 per unit annually, ordering cost is \$25, and $\sigma_{dLT} = 7$.

(i) What average number of units per year will be consistent with the specified annual service level? (02 Marks)

(ii) What average number of units short per cycle will provide the desired annual service level? (04 Marks)

(iii) What lead time service level is necessary for the 96 percent annual service level? (04 Marks)

(b) SUNURICH suppliers milk demand varies uniformly between 300 liters and 500 liters per week. They pay 20 cents per litre and charges 80 cents for it. Unsold has no salvage value and cannot be carries over into the next week due to spoilage. Find the optimal stocking level and its stockout risk for that quantity. (05 Marks)

(c) Demand for roses at a small flower shop can be approximated using a Poisson distribution that has a mean of four dozen per day. Profit on the roses is $3 per dozen. Leftover flowers are marked down and sold the next day at a loss of $2 per dozen. Assume that all marked-down flowers are sold. What is the optimal stocking level. (05 Marks)

Table 5:1 - Demand

Demand (dozen per day)	Cumulative Frequency
0	0.018
1	0.092
2	0.238
3	0.433
4	0.629
5	0.785

Question 06

(a) Explain factors affect to the effective use of warehouses. (05 Marks)

(b) 'Substituting information for real inventory raises service levels' Explain this statement with help of appropriate diagram/s. (05 Marks)

(c) List and explain three types of loading dock equipment and material handling equipment. (05 Marks)

(d) Warehouse Management systems play important role in warehousing. Explain using local and global examples. (05 Marks)

20 Marks

Question 07

(a) Explain factors-affect to the effective use of warehouses. (05 Marks)

(b)'Substituting information for real inventory raises service levels' Explain this statement with help of appropriate diagram/s. (05 Marks)

(c) List and explain three types of loading dock equipment and material handling equipment. (05 Marks)

(d) There are three basic types of warehousing: private, public and contract. Explain these basic types of warehousing using examples from Sri Lanka. (05 Marks)

Question 08

(a) Explain the importance of the concept 'Multi-Client Warehousing'. (05 Marks)

(b)'An efficient warehouse can do far more than simply store products.' Explain. (05 Marks)

(c) 'As the number of warehouses increases, transportation costs and stockout costs tend to decline, but inventory and warehouse costs increase.' Explain this statement with appropriate diagram. (10 Marks)

Equations:

Receiving rate: Total Volume/ (working hours/ # users)----------Eq1
Picking Rate: Total Outbound Volume/ (working hours/# users)----------Eq2

----------END OF THE QUESTION PAPER----------

TABLE 12.3 Normal distribution service levels and unit normal loss function

z	Lead Time Service Level	$E(z)$	z	Lead Time Service Level	$E(z)$	z	Lead Time Service Level	$E(z)$	z	Lead Time Service Level	$E(z)$
−2.40	.0082	2.403	−.80	.2119	.920	0.80	.7881	.120	2.40	.9918	.0030
−2.36	.0091	2.363	−.76	.2236	.889	0.84	.7995	.112	2.44	.9927	.0020
−2.32	.0102	2.323	−.72	.2358	.858	0.88	.8106	.104	2.48	.9934	.0020
−2.28	.0113	2.284	−.68	.2483	.828	0.92	.8212	.097	2.52	.9941	.0020
−2.24	.0125	2.244	−.64	.2611	.798	0.96	.8315	.089	2.56	.9948	.0020
−2.20	.0139	2.205	−.60	.2743	.769	1.00	.8413	.083	2.60	.9953	.0010
−2.16	.0154	2.165	−.56	.2877	.740	1.04	.8508	.077	2.64	.9959	.0010
−2.12	.0170	2.126	−.52	.3015	.712	1.08	.8599	.071	2.68	.9963	.0010
−2.08	.0188	2.087	−.48	.3156	.684	1.12	.8686	.066	2.72	.9967	.0010
−2.04	.0207	2.048	−.44	.3300	.657	1.16	.8770	.061	2.76	.9971	.0010
−2.00	.0228	2.008	−.40	.3446	.630	1.20	.8849	.056	2.80	.9974	.0008
−1.96	.0250	1.969	−.36	.3594	.597	1.24	.8925	.052	2.84	.9977	.0007
−1.92	.0274	1.930	−.32	.3745	.576	1.28	.8997	.048	2.88	.9980	.0006
−1.88	.0301	1.892	−.28	.3897	.555	1.32	.9066	.044	2.92	.9982	.0005
−1.84	.0329	1.853	−.24	.4052	.530	1.36	.9131	.040	2.96	.9985	.0004
−1.80	.0359	1.814	−.20	.4207	.507	1.40	.9192	.037	3.00	.9987	.0004
−1.76	.0392	1.776	−.16	.4364	.484	1.44	.9251	.034	3.04	.9988	.0003
−1.72	.0427	1.737	−.12	.4522	.462	1.48	.9306	.031	3.08	.9990	.0003
−1.68	.0465	1.699	−.08	.4681	.440	1.52	.9357	.028	3.12	.9991	.0002
−1.64	.0505	1.661	−.04	.4840	.419	1.56	.9406	.026	3.16	.9992	.0002
−1.60	.0548	1.623	.00	.5000	.399	1.60	.9452	.023	3.20	.9993	.0002
−1.56	.0594	1.586	.04	.5160	.379	1.64	.9495	.021	3.24	.9994	.0001
−1.52	.0643	1.548	.08	.5319	.360	1.68	.9535	.019	3.28	.9995	.0001
−1.48	.0694	1.511	.12	.5478	.342	1.72	.9573	.017	3.32	.9995	.0001
−1.44	.0749	1.474	.16	.5636	.324	1.76	.9608	.016	3.36	.9996	.0001
−1.40	.0808	1.437	.20	.5793	.307	1.80	.9641	.014	3.40	.9997	.0001
−1.36	.0869	1.400	.24	.5948	.290	1.84	.9671	.013			
−1.32	.0934	1.364	.28	.6103	.275	1.88	.9699	.012			
−1.28	.1003	1.328	.32	.6255	.256	1.92	.9726	.010			
−1.24	.1075	1.292	.36	.6406	.237	1.96	.9750	.009			
−1.20	.1151	1.256	.40	.6554	.230	2.00	.9772	.008			
−1.16	.1230	1.221	.44	.6700	.217	2.04	.9793	.008			
−1.12	.1314	1.186	.48	.6844	.204	2.08	.9812	.007			
−1.08	.1401	1.151	.52	.6985	.192	2.12	.9830	.006			
−1.04	.1492	1.117	.56	.7123	.180	2.16	.9846	.005			
−1.00	.1587	1.083	.60	.7257	.169	2.20	.9861	.005			
−.96	.1685	1.049	.64	.7389	.158	2.24	.9875	.004			
−.92	.1788	1.017	.68	.7517	.148	2.28	.9887	.004			
−.88	.1894	0.984	.72	.7642	.138	2.32	.9898	.003			
−.84	.2005	0.952	.76	.7764	.129	2.36	.9909	.003			

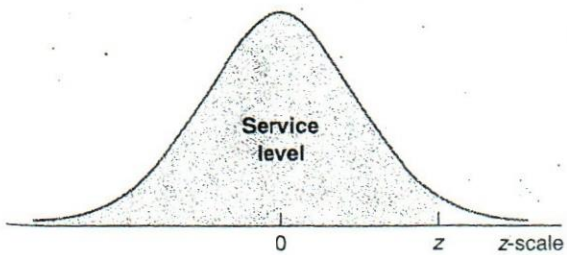

00031

Table B
1. Areas under the standardized normal curve, from $-\infty$ to $-z$

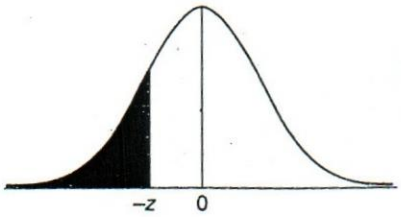

.09	.08	.07	.06	.05	.04	.03	.02	.01	.00	z
.0002	.0003	.0003	.0003	.0003	.0003	.0003	.0003	.0003	.0003	−3.4
.0003	.0004	.0004	.0004	.0004	.0004	.0004	.0005	.0005	.0005	−3.3
.0005	.0005	.0005	.0006	.0006	.0006	.0006	.0006	.0007	.0007	−3.2
.0007	.0007	.0008	.0008	.0008	.0008	.0009	.0009	.0009	.0010	−3.1
.0010	.0010	.0011	.0011	.0011	.0012	.0012	.0013	.0013	.0013	−3.0
.0014	.0014	.0015	.0015	.0016	.0016	.0017	.0018	.0018	.0019	−2.9
.0019	.0020	.0021	.0021	.0022	.0023	.0023	.0024	.0025	.0026	−2.8
.0026	.0027	.0028	.0029	.0030	.0031	.0032	.0033	.0034	.0035	−2.7
.0036	.0037	.0038	.0039	.0040	.0041	.0043	.0044	.0045	.0047	−2.6
.0048	.0049	.0051	.0052	.0054	.0055	.0057	.0059	.0060	.0062	−2.5
.0064	.0066	.0068	.0069	.0071	.0073	.0075	.0078	.0080	.0082	−2.4
.0084	.0087	.0089	.0091	.0094	.0096	.0099	.0102	.0104	.0107	−2.3
.0110	.0113	.0116	.0119	.0122	.0125	.0129	.0132	.0136	.0139	−2.2
.0143	.0146	.0150	.0154	.0158	.0162	.0166	.0170	.0174	.0179	−2.1
.0183	.0188	.0192	.0197	.0202	.0207	.0212	.0217	.0222	.0228	−2.0
.0233	.0239	.0244	.0250	.0256	.0262	.0268	.0274	.0281	.0287	−1.9
.0294	.0301	.0307	.0314	.0322	.0329	.0336	.0344	.0351	.0359	−1.8
.0367	.0375	.0384	.0392	.0401	.0409	.0418	.0427	.0436	.0446	−1.7
.0455	.0465	.0475	.0485	.0495	.0505	.0516	.0526	.0537	.0548	−1.6
.0559	.0571	.0582	.0594	.0606	.0618	.0630	.0643	.0655	.0668	−1.5
.0681	.0694	.0708	.0721	.0735	.0749	.0764	.0778	.0793	.0808	−1.4
.0823	.0838	.0853	.0869	.0885	.0901	.0918	.0934	.0951	.0968	−1.3
.0985	.1003	.1020	.1038	.1056	.1075	.1093	.1112	.1131	.1151	−1.2
.1170	.1190	.1210	.1230	.1251	.1271	.1292	.1314	.1335	.1357	−1.1
.1379	.1401	.1423	.1446	.1469	.1492	.1515	.1539	.1562	.1587	−1.0
.1611	.1635	.1660	.1685	.1711	.1736	.1762	.1788	.1814	.1841	−0.9
.1867	.1894	.1922	.1949	.1977	.2005	.2033	.2061	.2090	.2119	−0.8
.2148	.2177	.2206	.2236	.2266	.2296	.2327	.2358	.2389	.2420	−0.7
.2451	.2483	.2514	.2546	.2578	.2611	.2643	.2676	.2709	.2743	−0.6
.2776	.2810	.2843	.2877	.2912	.2946	.2981	.3015	.3050	.3085	−0.5
.3121	.3156	.3192	.3228	.3264	.3300	.3336	.3372	.3409	.3446	−0.4
.3483	.3520	.3557	.3594	.3632	.3669	.3707	.3745	.3783	.3821	−0.3
.3859	.3897	.3936	.3974	.4013	.4052	.4090	.4129	.4168	.4207	−0.2
.4247	.4286	.4325	.4364	.4404	.4443	.4483	.4522	.4562	.4602	−0.1
.4641	.4681	.4721	.4761	.4801	.4840	.4880	.4920	.4960	.5000	−0.0

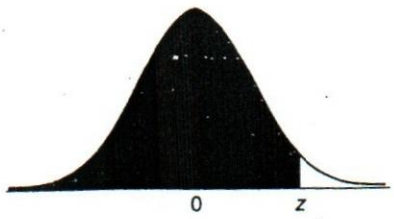

Table B
(concluded)
2. Areas under the standardized normal curve, from $-\infty$ to $+z$

z	.00	.01	.02	.03	.04	.05	.06	.07	.08	.09
.0	.5000	.5040	.5080	.5120	.5160	.5199	.5239	.5279	.5319	.5359
.1	.5398	.5438	.5478	.5517	.5557	.5596	.5636	.5675	.5714	.5753
.2	.5793	.5832	.5871	.5910	.5948	.5987	.6026	.6064	.6103	.6141
.3	.6179	.6217	.6255	.6293	.6331	.6368	.6406	.6443	.6480	.6517
.4	.6554	.6591	.6628	.6664	.6700	.6736	.6772	.6808	.6844	.6879
.5	.6915	.6950	.6985	.7019	.7054	.7088	.7123	.7157	.7190	.7224
.6	.7257	.7291	.7324	.7357	.7389	.7422	.7454	.7486	.7517	.7549
.7	.7580	.7611	.7642	.7673	.7703	.7734	.7764	.7794	.7823	.7852
.8	.7881	.7910	.7939	.7967	.7995	.8023	.8051	.8078	.8106	.8133
.9	.8159	.8186	.8212	.8238	.8264	.8289	.8315	.8340	.8365	.8389
1.0	.8413	.8438	.8461	.8485	.8508	.8531	.8554	.8577	.8599	.8621
1.1	.8643	.8665	.8686	.8708	.8729	.8749	.8770	.8790	.8810	.8830
1.2	.8849	.8869	.8888	.8907	.8925	.8944	.8962	.8980	.8997	.9015
1.3	.9032	.9049	.9066	.9082	.9099	.9115	.9131	.9147	.9162	.9177
1.4	.9192	.9207	.9222	.9236	.9251	.9265	.9279	.9292	.9306	.9319
1.5	.9332	.9345	.9357	.9370	.9382	.9394	.9406	.9418	.9429	.9441
1.6	.9452	.9463	.9474	.9484	.9495	.9505	.9515	.9525	.9535	.9545
1.7	.9554	.9564	.9573	.9582	.9591	.9599	.9608	.9616	.9625	.9633
1.8	.9641	.9649	.9656	.9664	.9671	.9678	.9686	.9693	.9699	.9706
1.9	.9713	.9719	.9726	.9732	.9738	.9744	.9750	.9756	.9761	.9767
2.0	.9772	.9778	.9783	.9788	.9793	.9798	.9803	.9808	.9812	.9817
2.1	.9821	.9826	.9830	.9834	.9838	.9842	.9846	.9850	.9854	.9857
2.2	.9861	.9864	.9868	.9871	.9875	.9878	.9881	.9884	.9887	.9890
2.3	.9893	.9896	.9898	.9901	.9904	.9906	.9909	.9911	.9913	.9916
2.4	.9918	.9920	.9922	.9925	.9927	.9929	.9931	.9932	.9934	.9936
2.5	.9938	.9940	.9941	.9943	.9945	.9946	.9948	.9949	.9951	.9952
2.6	.9953	.9955	.9956	.9957	.9959	.9960	.9961	.9962	.9963	.9964
2.7	.9965	.9966	.9967	.9968	.9969	.9970	.9971	.9972	.9973	.9974
2.8	.9974	.9975	.9976	.9977	.9977	.9978	.9979	.9979	.9980	.9981
2.9	.9981	.9982	.9982	.9983	.9984	.9984	.9985	.9985	.9986	.9986
3.0	.9987	.9987	.9987	.9988	.9988	.9989	.9989	.9989	.9990	.9990
3.1	.9990	.9991	.9991	.9991	.9992	.9992	.9992	.9992	.9993	.9993
3.2	.9993	.9993	.9994	.9994	.9994	.9994	.9994	.9995	.9995	.9995
3.3	.9995	.9995	.9995	.9996	.9996	.9996	.9996	.9996	.9996	.9997
3.4	.9997	.9997	.9997	.9997	.9997	.9997	.9997	.9997	.9997	.9998

TABLE 12.4 Summary of inventory formulas

Model	Formula		Symbols
1. Basic EOQ	$Q_0 = \sqrt{\frac{2DS}{H}}$	(12–2)	Q_0 = Economic order quantity D = Annual demand S = Order cost H = Annual carrying cost per unit Q = Order quantity
	$TC = \frac{Q}{2}H + \frac{D}{Q}S$	(12–1)	
	Length of order cycle $= \frac{Q}{D}$	(12–3)	
2. Economic production quantity	$Q_0 = \sqrt{\frac{2DS}{H}}\sqrt{\frac{p}{p-u}}$	(12–5)	Q_0 = Optimal run or order size p = Production or delivery rate u = Usage rate I_{MAX} = Maximum inventory level
	$TC = \frac{I_{max}}{2}H + \frac{D}{Q}S$	(12–4)	
	Cycle time $= \frac{Q}{u}$	(12–6)	
	Run time $= \frac{Q}{p}$	(12–7)	
	$I_{max} = \frac{Q_0}{p}(p-u)$	(12–8)	
3. Quantity discounts	$TC = \frac{Q}{2}H + \frac{D}{Q}S + PD$	(12–9)	P = Unit price
4. Reorder point under:			ROP = Quantity on hand at reorder point d = Demand rate LT = Lead time $\bar{d}$ = Average demand rate σ_d = Standard deviation of demand rate z = Standard normal deviation $\overline{LT}$ = Average lead time σ_{LT} = Standard deviation of lead time
a. Constant demand and lead time	ROP $= d(LT)$	(12–10)	
b. Variable demand rate	ROP $= \bar{d}LT + z(\sigma_d)\sqrt{LT}$	(12–13)	
c. Variable lead time	ROP $= d\overline{LT} + z(\sigma_{LT})d$	(12–14)	
d. Variable lead time and demand	ROP $= \bar{d}\overline{LT} + z\sqrt{\overline{LT}\sigma_d^2 + \bar{d}^2\sigma_{LT}^2}$	(12–15)	
5. ROP shortages	$E(n) = E(z)\sigma_{dLT}$	(12–16)	$E(n)$ = Expected number short per cycle $E(z)$ = Standardized number short σ_{dLT} = Standard deviation of lead time demand $E(N)$ = Expected number short per year SL_{annual} = Annual service level
a. Units short per cycle			
b. Units short per year	$E(N) = E(n)\frac{D}{Q}$	(12–17)	
c. Annual service level	$SL_{annual} = 1 - \frac{E(z)\sigma_{dLT}}{Q}$	(12–19)	
6. Fixed interval	$Q = \bar{d}(OI + LT) + z\sigma_d\sqrt{OI + LT} - A$	(12–20)	OI = Time between orders A = Amount on hand at order time
7. Single period	$SL = \frac{C_s}{C_s + C_e}$	(12–21)	SL = Service level C_s = Shortage cost per unit C_e = Excess cost per unit

KEY TERMS

A-B-C approach, 548
cycle counting, 549
economic order quantity (EOQ), 550
excess cost, 573
fill rate, 570
fixed-order-interval (FOI) model, 570
holding (carrying) cost, 547
inventory, 541
inventory turnover, 544
lead time, 547
Little's Law, 544
ordering costs, 548
periodic system, 545
perpetual inventory system, 545
point-of-sale (POS) system, 547
quantity discounts, 558
reorder point (ROP), 563

Colombo International Nautical and Engineering College
CINEC Campus
Faculty of Management, Humanities & Social Sciences
Department of Logistics & Transport
BSc in International Transportation Management and Logistics
Course CODE: COM550

CINEC MARITIME CAMPUS
Not To Be Taken Away Without Proper Authorization
LIBRARY

Year 2 Semester II

SEMESTER END EXAMINATION

Maritime Law – MLAW0331

- This paper consists of EIGHT questions on TWO (02) pages.
- Answer FIVE Questions including Question 01.
- Only non-programmable calculators are allowed.
- You may use appropriate graphs, diagrams, equation/s to prove or justify the answers.
- If you have any doubt as to the interpretation of the wording of a question, make your own decision, but clearly state it on the script.
- Write legibly

Date: 2019.09.04 Pass mark: 50% Time: 03 Hours

Question 01 (Compulsory)

(a) What do you understand by the term "Salvage" in relation t the maritime transportation environment"? (06 marks)

(b) What are the three conditions which must be fulfilled before the research of maritime property can give rise to a valid claim for a salvage award?

(08 marks)

(c) Discuss about the standard salvage agreement, its advantages and disadvantages. (06 marks)

Question 02

Under circumstances giving rise to a Maritime Liens, discuss what is:

(a) Contractual Obligations (10 marks)
(b) Tortious Act (damage by collision) (10 marks)

Question 03

Give an introduction to "York Antwerp" Rules. (20 marks)

Colombo International Nautical and Engineering College
CINEC Campus
Faculty of Management, Humanities & Social Sciences
Department of Logistics & Transport
BSc in International Transportation Management and Logistics
Course CODE: COM550

Question 04

(a) Briefly discuss why ships are commonly placed under mortgage and therefore what are the consequential constrains? (10 marks)

(b) How are marine losses categorized for the purpose of settling marine losses? (10 Marks)

Question 05

Along with brief notes to each, explain what are the three Basic Principles of Marine Insurance? (20 marks)

Question 06

Explain the following related to Maritime Insurance

(a) Warranties (04 marks)
(b) Express warranties (08 marks)
(c) Implied warranties (08 marks)

Question 07

What do you understand by the following terms:

(a) Common carrier (10 marks)
(b) Private carrier (10 marks)

Question 08

The Master of a vessel deviated the route under justifiable deviation to a port of refuge where you are the agent, informs you by telex / email that his vessel has collided with another at sea.

Prepare a questioner you would ask the master by telex or email. (20 marks)

----------END OF THE QUESTION PAPER----------

~~FOURTH~~ library

Colombo International Nautical and Engineering College

CINEC Campus

Faculty of Management, Humanities & Social Sciences

Department of Logistics & Transport

BSc in International Transportation Management and Logistics

Course CODE: COM550

Year 2 Semester II

SEMESTER END EXAMINATION

Air cargo and Passenger Transportation – ACPT0305

- This paper consists of EIGHT questions on FOUR (04) pages.
- Answer FIVE Questions including Question 01.
- Only non-programmable calculators are allowed.
- You may use appropriate graphs, diagrams, equation/s to prove or justify the answers.
- If you have any doubt as to the interpretation of the wording of a question, make your own decision, but clearly state it on the script.
- Write legibly

Date: 2019.09.02 Pass mark: 50% Time: 03 Hours

Question 01: (Compulsory)

a) What is a passenger airline alliance? Name three passenger airline alliances that exist in the air transport industry. (05 Marks)

b) Draw the weight buildup of an aircraft and name each weight category. (05 Marks)

c) What are the three (03) main axis of rotation of an aircraft and four (04) forces that act on the surface of an aircraft? Name and illustrate with the use of a diagram. (10 Marks)

Question 02

a) Name five (05) pioneers who have contributed to the development of the air transport industry. (05 Marks)

b) Explain the development of Civil Aviation Authority from the Department of Civil Aviation and the change in Civil Aviation Management occurred when the State Functions were transferred into public corporations or limited liability company/companies with a use of a diagram. (15 Marks)

Question 03

a) There are different characteristics of air cargo. What are these different characteristics? Explain four of these characteristics in detail. (10 Marks)

b) Briefly explain the role of a freight forwarder. (05 Marks)

c) Explain what is an airway bill. (05 Marks)

Question 04

a) Airline industry is an oligopolistic market. Explain characteristics of an oligopolistic market in detail. (15 Marks)

b) ULDs are expensive assets that are considered as aircraft parts. List advantages of ULDs. (05 Marks)

Question 05

a) There are three main airline business models exist in the present-day air transport industry. What are these business models? Identify the unique characteristics of these business models with at least two examples for each airline business model. (15 Marks)

b) List four (04) types of air cargo carriers based on their air cargo business model. (05 Marks)

Question 06

There are specific performance indicators used in the air transport industry in order to understand the performance of the airlines and its market. SkyBlue Airline is conducting a study to identify their performance in sectors originating from JFK (John F. Kennedy) in USA.

SkyBlue is a domestic US carrier that operates a fleet of 5 aircraft between major cities in the country. The type of aircraft, number of passengers, aircraft capacity, city pairs and distance are given below. Assume that each aircraft operates for all the 365 days in a year and assume that all passengers are revenue passengers.

Aircraft	No. of passengers	Capacity of aircraft	City-pair	Distance	Frequency
Boeing 737-800	190	202	JFK - ORD	1190 km	Daily once
Boeing 737-800	200	210	JFK - MIA	1753 km	Daily twice
Boeing 737-800	210	240	JFK – ATL	1222 km	Daily once
A330 - 300	380	390	JFK – LAX	1115 km	Daily twice
A330 - 300	410	410	JFK - SFO	4161 km	Daily once

a) What will be the ASK per year for SkyBlue airline? (07 Marks)

b) What will be the RPK per year for SkyBlue airline? (07 Marks)

c) What will be the passenger load factor per year for SkyBlue airline? (06 Marks)

Question 07

SHELL model and Reasons Model are tools used in air transport industry to understand the human factors present in the system which impact on safety. These models exist in the air transport industry can be used to support minimize human error and achieve the system's production goals. Select either one of these models and explain the model of your choice using an example which shows how these models can provide inputs to airlines/service providers to establish a safe air transportation system. (20 Marks)

Question 08

a) Outline the difference between merger and an alliance with their pros and cons. (10 Marks)

b) Identify the parts of the below aircraft numbered from 1 – 12 (10 Marks)

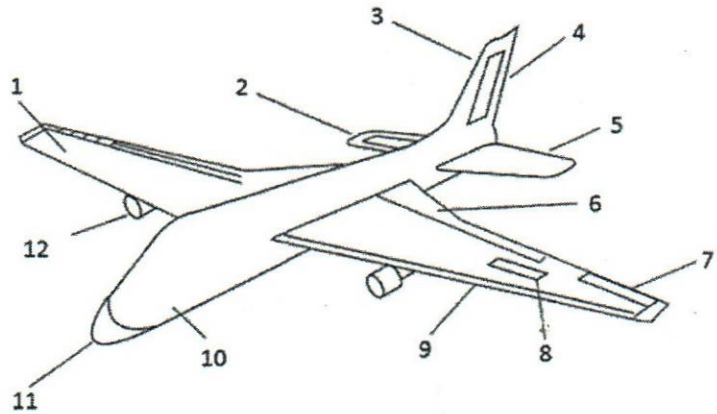

----------END OF THE QUESTION PAPER----------

Library

Colombo International Nautical and Engineering College

CINEC Campus
Faculty of Management, Humanities and Social Sciences
Department of Logistics & Transport
BSc in International Transportation management and Logistics
Course CODE: COM550

CINEC MARITIME CAMPUS LIBRARY Not To Be Taken Away Without Proper Authorization

Year 2 Semester II

SEMESTER END EXAMINATION

E-Commerce – ECOM0370

- This paper consists of EIGHT questions on FOUR (04) pages.
- Answer FIVE Questions including Question 01.
- Only non-programmable calculators are allowed.
- You may use appropriate graphs, diagrams, equation/s to prove or justify the answers.
- If you have any doubt as to the interpretation of the wording of a question, make your own decision, but clearly state it on the script.
- Write legibly

Date: 2019.08.28 Pass mark: 50% Time: 03 Hours

Question 1(Compulsory)

(a) Explain key Ingredients in a Business Model (16 Marks)

(b) Name TWO Business Models in emerging Ecommerce areas (04 Marks)

Question 02

(a) Write down **5 methods** of E-commerce payment and briefly explain them. (10 Marks)

(b) Describe the process of Online Credit Card Transactions by using a Diagram. (06 Marks)

(c) Write TWO Advantages of using Credit Cards for Online Transactions. (04 Marks)

Question 03

(a) Explain the term" World Wide Web". (03 Marks)

(b) Explain 3 basic concepts, which are used to understand the term "Internet" (06 Marks)

(c) Write 2 **Disadvantages** of social networks (04 Marks)

(d) Discuss Four Layers of Hourglass Layered architecture using a diagram. (07 Marks)

Question 04

Design the following Web form using HTML.

Important:

There are Two text boxes to enter First and Last Name.

There are Two radio buttons for Male and Female.

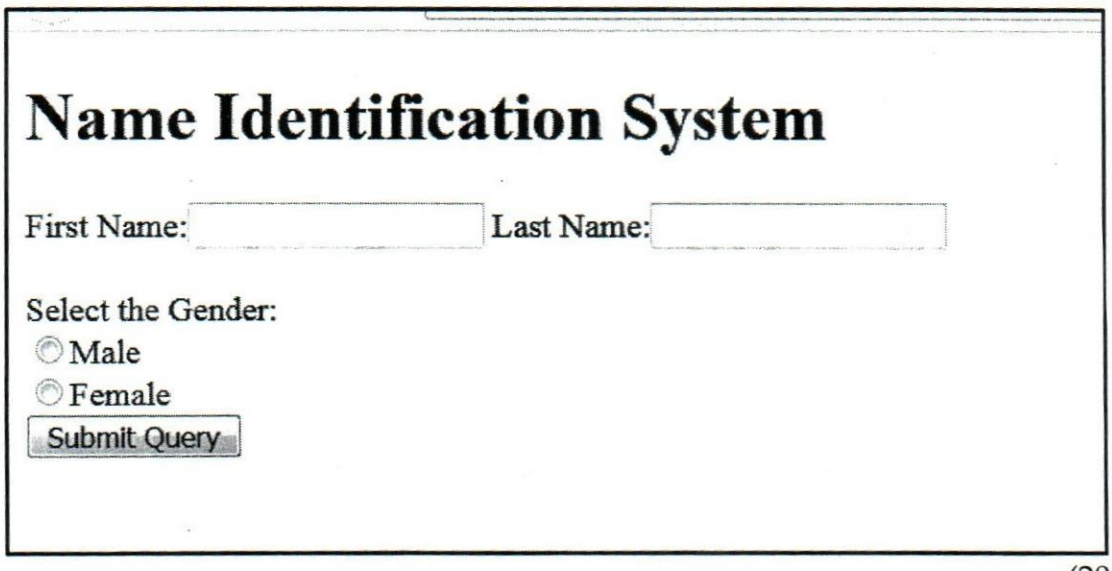

(20 Marks)

Question 5

(a) Explain FIVE main stages in Software Development Life Cycle. (10 Marks)

(b) Write FIVE methods which can be used to collect Customer Requirements when developing a new software. (05 Marks)

(c) Describe the Importance of conducting Software Testing before, hand over the new software to the client (05 Marks)

Question 06

(a) Explain THREE security methods/techniques that the consumer has to follow in Online Purchasing. (06 Marks)

(b) Explain Malicious codes by giving TWO examples. (04 Marks)

(c) Write SIX Key dimensions that should be existed in Secured E Commerce Environment. (06 Marks)

(d) Explain Digital Certificate using a Diagram (04 Marks)

Question 07

(a) Explain the Term Ethics. (04 Marks)

(b) Describe FOUR Moral Dimensions of the Internet Society (08 Marks)

(c) What is the goal of Intellectual Property Law? Explain. (02 Marks)

(d) Describe THREE main types of Intellectual property protection. (06 Marks)

Question 08

Briefly explain following Key Concepts.

(a) Extranet

(b) Client Machine

(c) HTML

(d) Portal

(e) Web Server

(f) VPN

(g) http

(h) Internet 2

(i) Blogs

(j) Search Engine

(2 *10 Marks)

----------END OF THE QUESTION PAPER----------

LIBRARY

00030

Colombo International Nautical and Engineering College
CINEC Campus
Faculty of Management, Humanities & Social Sciences
Department of Logistics & Transport
BSc in International Transportation Management and Logistics
Course CODE: COM550

LIBRARY

Year 2 Semester II

SEMESTER END EXAMINATION

Transport Economics – ECON0319

- This paper consists of EIGHT questions on SIX (06) pages.
- Answer FIVE (05) Questions including Question 01.
- Only non-programmable calculators are allowed.
- You may use appropriate graphs, diagrams, equation/s to prove or justify the answers.
- If you have any doubt as to the interpretation of the wording of a question, make your own decision, but clearly state it on the script.
- Write legibly
- Use MCQ sheet provided with the paper to answer Question 01.

Date: 2019.08.26 Pass mark: 50% Time: 03 Hours

Question 01 (Compulsory)

1. The amount of services which passengers are willing and able to undertake to the given prices is called as,
   (a) Derived demand
   (b) Indirect demand
   (c) Effective demand
   (d) Direct demand

2. To calculate opportunity cost which one of the following is considered,
   (a) Implicit cost
   (b) Explicit cost
   (c) Both of (A) and (B)
   (d) None of above

3. Demand for Cruise ships by tourist have
   (a) Direct demand
   (b) Derived demand
   (c) Indirect demand
   (d) Effective demand.

4. Price elasticity of a transport service is not depend on,
   (a) Availability of related services
   (b) Time period
   (c) Percentage of income spend on the transport service.
   (d) Price of the transport service

5. Generalize price of a transport mode is not included,
   (a) Monetary cost
   (b) Time cost
   (c) Security cost
   (d) Externalities

6. Which one of the following a common characteristic of each type of price discriminations?
   (a) Output is sold to different consumers at different prices
   (b) Output sold for the maximum price each consumer is willing to pay
   (c) Price differs across the commodity unit not across consumers
   (d) Price differ across the consumers not across commodity units.

Colombo International Nautical and Engineering College
CINEC Campus
Faculty of Management, Humanities & Social Sciences
Department of Logistics & Transport
BSc in International Transportation Management and Logistics
Course CODE: COM550

7. Excess supply of transport not arises because of

   (a) Technological improvement

   (b) Operate according to time table in off peak time.

   (c) Less competition

   (d) Introduction of new facilities

The following are the research outcomes in relation to demand pattern.

Table 1.1 : Examples of Elasticity used in London

	Stimulus (generalised price)		
Response	Car price	Bus price	Tube price
Car demand	-0.30	0.09	0.057
Bus demand	0.17	-0.64	0.13
Tube demand	0.056	0.20	-0.50

Answer Questions 8-10 using above Table1.1

8. Price elasticity of car demand is ,

   (a) Relatively more inelastic than other

   (b) Positively related

   (c) Relatively more elastic than PED for bus

   (d) None of above.

9. Bus and tube transport being a

   (a) Complement products

   (b) Substitute products

   (c) Giffen products

   (d) Superior products

Colombo International Nautical and Engineering College
CINEC Campus
Faculty of Management, Humanities & Social Sciences
Department of Logistics & Transport
BSc in International Transportation Management and Logistics
Course CODE: COM550

10. Which one of the following is incorrect,

(a) All price elasticity values are inelastic.

(b) All values in the table are represent coefficients of price elasticity of demand.

(c) Both price and cross elasticity of demand

(d) Both (A) and (C)

(20 Marks)

Question 02

(a) Categorize Factors of Production in the transport market with definition

(08 Marks)

(b) Explain the relationship between utility and price. (04 Marks)

(c) "well - functioning transport sector is essential for economy to be efficient" discuss

(08 Marks)

Question 03

(a) Demand for sea transportation is depend on some factors. Justify your answer using appropriate examples. (08 Marks)

(b) Explain that importance of concept of demand elasticity for the pricing decision

(12 Marks)

Question 04

(a) Explain the meaning of Transport supply? (04 Marks)

(b) What are the determinates of supply of logistics services in the economy?

(06 Marks)

(c) What do mean by elasticity of transport supply? Explain factors which are determining the elasticity of supply with examples. (10 Marks)

Colombo International Nautical and Engineering College
CINEC Campus
Faculty of Management, Humanities & Social Sciences
Department of Logistics & Transport
BSc in International Transportation Management and Logistics
Course CODE: COM550

Question 05

Price discrimination is the term used to describe a pricing policy whereby a firm distinguishes different between different groups of customers. Each group or market segment is charged a difference price for identical units of supply. 'Express Bus Service Company' is deciding to discriminate ticket prices among their passenger. The bus service company seeks advises from you on the following questions.

(a) What are the market conditions required for price discrimination? (04 Marks)

(b) What are the advantages of price discrimination? (06 Marks)

(c) What are the disadvantages of price discrimination? (06 Marks)

(d) Is price discrimination depending on relative elasticity of bus services? Explain with an appropriate diagram (04 Marks)

Question 06

(a) You are required to do travel demand forecast for airline demand in 2030 by a transport research company. Which factors are you going to consider? Why? (10 Marks)

(b) Explain that the way of dealing with negative externalities in the transport industry with appropriate examples (10 Marks)

Question 07

(a) In general pricing in transport needs many considerations due to the derived demand complexities. What are the key factors in setting a freight rate in sea transport? Your answer needs a discussion on the four main factors that influence by supply of shipping. (15 Marks)

(b) Name the Surcharges or additional costs associated in sea freight charges.
(05 Marks)

Question 08

Write short notes on any four (04) of the followings.

(a) Opportunity cost in transportation.

(b) Low cost carries in airline industry.

(c) Economic forecasting

(d) Public Private partnership programme in Sri Lanka

(e) Financial appraisal in infrastructure development

(f) Cost classification in railway.

(20 Marks)

----------END OF THE QUESTION PAPER----------

Colombo International Nautical and Engineering College

CINEC Campus

Faculty of Management, Humanities & Social Sciences

Department of Logistics & Transport

BSc in International Transportation Management and Logistics

Course CODE: COM550

Year 2 Semester II

SEMESTER END EXAMINATION

Transport Economics – ECON0319

MCQ Answer Sheet

- Cross (×) the relavant box according to your answer

Date: 2019.08.26 Pass mark: 50% Time: 03 Hours

Question 01

1. A B C D
2. A B C D
3. A B C D
4. A B C D
5. A B C D
6. A B C D
7. A B C D
8. A B C D
9. A B C D
10. A B C D

Colombo International Nautical and Engineering College
CINEC Campus
Faculty of Management, Humanities & Social Sciences
Department of Logistics & Transport
BSc in International Transportation Management and Logistics
Course CODE: COM550

Year 2 Semester II

REPEAT EXAMINATION

Maritime Law – MLAW0331

- This paper consists of EIGHT questions on FIVE (05) pages.
- Answer FIVE Questions including Question 01.
- Only non-programmable calculators are allowed.
- You may use appropriate graphs, diagrams, equation/s to prove or justify the answers.
- If you have any doubt as to the interpretation of the wording of a question, make your own decision, but clearly state it on the script.
- Write legibly

Date: 2019.01.07 Pass mark: 50% Time: 03 Hours

Question 01: (Compulsory)

The major operation under a Charter Party is to find continued and suitable employment for the ships to maximise revenue earnings. These operations are therefore primarily concerned with finding suitable cargoes for ships irrespective of whether the ships are owned or are hired.

Explain the above in the context of;

(a) Description of a Ship (05 Marks)

(b) Types of Charter Parties (05 Marks)

(c) Voyage Charter Party (05 Marks)

(d) Relationship between Charter Party and Bills of Lading (05 Marks)

Question 02

"General Average is a right of contribution as between the various interests in a sea voyage: the Ship; the Cargo, and Freight". Considering this statement, answer the following:

(a) Explain in your own words; the concept of General Average and how it works (05 Marks)
(b) State four (4) instances where General Average could be declared (05 Marks)
(c) State the main requisites for a General Average declaration (05 Marks)
(d) In the case of *Robinson v Price* [(1877) 2 QB 295] the court held that the cost of using cargo coal to stay afloat could be allowed in General Average. Provide reasons for such a decision (05 Marks)

Question 03

Contract of Carriage plays an important role in the subject of international trade law as well as in the maritime law. However, the frequently used Bill of Lading document cannot be considered such a contract in general but it is much widely accepted as 'an evidence of a contract'. In view of the said, answer the following:

(a) Name three (3) main types of Contracts of Carriage (03 Marks)
(b) Explain all those three main types of Contracts of Carriage briefly and separately (06 Marks)
(c) Describe main functions of a Bill of Lading separately (04 Marks)
(d) Provide brief explanations on following types of Bills of Lading:
  (i) Ocean or Master BL (02 Marks)
  (ii) Received for Shipment BL (02 Marks)
  (iii) Claused BL (02 Marks)
(e) State the main difference between a Bill of Lading and a Seaway Bill (01 Mark)

Question 04

Seaworthiness is a primary condition a ship must satisfy for its navigation. Explain the concept of seaworthiness in the light of International Maritime Organization certification. (20 Marks)

Question 05

"Limitation of liability is a right afforded to carriers in safeguarding the shipping industry as a whole. However, this right to limit can only be availed in circumstance where the carrier has not committed any purposeful / intentional act of his own that had resulted the damage or the loss. This right is generally extended to the servants and agents of the carrier as well within the context of maritime law". Considering this statement, answer the following:

(a) Explain in your own words, the expression of 'Right to Limit' (04 Marks)

(b) State the main three (3) regimes (with the year of adoption) that presently prevail in the sector of limitation of maritime claims (03 Marks)

(c) State three types of claims that would be subjected to limitation under the LLMC regimes (03 Marks)

(d) State three (3) types of claims that would be exempted from limitation under the LLMC regimes (03 Marks)

(e) Explain briefly in your own words how the constitution of a limitation fund would benefit a carrier alleged to have committed a loss or damage (07 Marks)

Question 06

Safety of Life at Sea is not a concept which emerged in recent times but emerged in more than hundred years ago. Explain the international regulatory provisions of the concept of
Safety of Life at Sea in modern day context. (20 Marks)

Question 07

(a) "Nationality is one of the most important elements in the operation of ships. It determines the rights and obligations under the law of the State in which such ship is registered. Historically, ships belonged to the State whose flag it flies during voyage. Such State thereby has the power to exercise 'flag State jurisdiction' over such vessel.

States grant its nationality to a ship once it is registered in its own registry. Therefore, the State of registration can be determined from the flag it flies and vice-versa. "(Explain)

(10 Marks)

(b) "Other than Registration; the ownership factor is another important element in shipping. It would not only enable the identification of the 'owner' but also define the nature of ownership, other matters surrounding the operation of the ship such as whether the ship is under Charter Party, mortgage or some other category as to its operation and use. All ship registers require some information on ownership to be provided at time of presenting an application for registration. This would vary from requiring detailed information related to vessel ownership to deciding on the nationality factor." (Explain)

(10 Marks)

Question 08

Write appropriately on any **FOUR** (04) of the following: (20 Marks)

(a) MARPOL 73/78

(b) Bunker Oil Convention 2001

(c) Fund Conventions 72/92

(d) Hague Visby Rules 1968

(e) Rotterdam Rules 2008

(f) UNCLOS 1982

----------END OF THE QUESTION PAPER----------

Library

Colombo International Nautical and Engineering College

CINEC Campus
Faculty of Management, Humanities & Social Sciences
Department of Logistics & Transport
BSc in International Transportation Management and Logistics
Course CODE: COM550

32

Year 2 Semester II

SEMESTER END EXAMINATION

Port Management – PORT0352

- This paper consists of EIGHT questions on TWO (02) pages.
- Answer FIVE Questions including Question 01.
- Only non-programmable calculators are allowed.
- You may use appropriate graphs, diagrams, equation/s to prove or justify the answers.
- If you have any doubt as to the interpretation of the wording of a question, make your own decision, but clearly state it on the script.
- Write legibly

Date: 2018.09.22 Pass mark: 50% Time: 03 Hours

Question 01 (Compulsory)

What is a Sea Port & list out Port all facilities? (20 Marks)

Question 02

What are the Commercial Sea Ports in Sri Lanka & describe port services/facilities of each Port? (20 Marks)

Question 03

(a) Why measure port performance? (10 Marks)

(b) What are the types of port performance measures? (10 Marks)

Question 04

Describe Sri Lanka Ports Authority including its functions, powers & duties? (20 Marks)

Question 05

List and describe modern port related value added logistic services? (20 Marks)

Question 06

(a) Describe service port marketing and list out marketing tools to promote the port? (10 Marks)

(b) Who are the port customers & list out their expectations (10 Marks)

Question 07

(a) List out Main Tariff Items of Sri Lanka Ports Authority Tariff? (10 Marks)

(b) What are the container terminals in the Port of Colombo and list terminal facilities? (10 Marks)

Question 08

What are the navigational services & facilities that should be available in a modern port? (20 Marks)

----------END OF THE QUESTION PAPER----------

Colombo International Nautical and Engineering College
CINEC Campus
Faculty of Management, Humanities & Social Sciences
Department of Logistics & Transport
BSc in International Transportation Management and Logistics
Course CODE: COM550

33

Year 2 Semester II

SEMESTER END EXAMINATION

Inventory and Warehouse Management – IWMG0348

- This paper consists of EIGHT questions on FIVE (05) pages.
- Answer FIVE Questions including Question 01.
- Only non-programmable calculators are allowed.
- You may use appropriate graphs, diagrams, equation/s to prove or justify the answers.
- If you have any doubt as to the interpretation of the wording of a question, make your own decision, but clearly state it on the script.
- Write legibly
- Supporting documents are attached

Date: 2018.09.22 Pass mark: 50% Time: 03 Hours

Question 01: (Compulsory)

(a) Garden variety Flower shop uses 750 clay pots a month. The pots are purchased at $2 each. Annual carrying costs per pot are estimated to be 30 percent of cost, and ordering costs are $20 per order. The manager has been using an order size of 1,500 flower pots. What additional annual cost is the shop by staying with this order size?

(05 Marks)

(b) A produce distributor uses 800 packing creates a month, which it purchases at a cost of $10 each. The manager has assigned an annual carrying cost of 35 percent of the purchase price per crate. Ordering costs are $28. Currently the manager orders once a month. How much could the firm save annually in ordering and carrying costs by using the EOQ?

(05 Marks)

(c) A mail-order house uses 18,000 boxes a year. Carrying costs are 60 cents per box a year, and ordering costs are $96. The following price schedule applies. Determine the optimal order quantity and the number of orders per year. (10 Marks)

Table 1:1 – Number of Boxes

Number of Boxes	Price per Box ($)
1000 to 1999	1.25
2000 to 4999	1.2
5000 to 9999	1.15
10000 or more	1.1

Question 02

(a) The house keeping section of a motel uses approximately 400 washcloths per day. The actual number tends to vary with the number of guests on any given night. Usage can be approximated by a normal distribution that has a mean of 400 and a standard deviation of 9 washcloths per day. A linen supply company delivers towels and washcloths with a lead time of three days. If the motel policy is to maintain a stock out risk of 2 percent, what is the minimum number of washcloths that must be on hand at reorder time, and how much of that amount can be considered safety stock? (04 Marks)

(b) The motel in the proceeding example uses approximately 600 bars of soap each day, and this tends to be fairly constant. Lead time for soap delivery is normally distributed with a mean of six days and a standard deviation of two days. A service level of 90 percent is desired.

(i) Find the Re Order Point (ROP). (04 Marks)

(ii) How many days of supply are on hand at the ROP? (04 Marks)

(c) Suppose that the manager of a construction supply house determined from historical records that demand for sand during lead time averages 50 tons. In addition, suppose the manager determined that demand during lead time could be described by a normal distribution that has a mean of 50 tons and a standard

deviation of 5 tons. Answer these questions, assuming that the manager is willing to accept a stockout risk of no more than 3 percent:

(i) How much safety stock be held? (04 Marks)

(ii) What reorder point should be used? (04 Marks)

Question 03

(a) A lab orders a number of chemicals from the same supplier every 30 days. Lead time is five days. The assistant manager of the lab must determine how much of one of these chemicals to order. A check of stock revealed that eleven 25 ml jars are on hand. Daily usage of the chemical is approximately normal with a mean of 15.2 ml per day and a standard deviation of 1.6 ml per day. The desired service level for this chemical is 95%.

(i) How many jars of the chemical should be ordered? (05 Marks)

(ii) What is the average amount of safety stock of the chemical? (05 Marks)

(b) Sweet cider is delivered weekly to Cindy's Cider Bar. Demand varies uniformly between 300 liters and 500 liters per week. Cindy pays 20 cents per liter for the cider and charges 80 cents per liter for it. Unsold cider has no salvage value and cannot be carries over into the next week due to spoilage. Find the optimal stocking level and its stockout risk for that quantity. (05 Marks)

(c) Demand for long stemmed red roses at a small flower shop can be approximated using a Poisson distribution that has a mean of four dozen per day. Profit on the roses is $3 per dozen. Leftover flowers are marked down and sold the next day at a loss of $2 per dozen. Assume that all marked-down flowers are sold. What is the optimal stocking level. (05 Marks)

Table 3:1 - Demand

Demand (dozen per day)	Cumulative Frequency
0	0.018
1	0.092
2	0.238
3	0.433
4	0.629
5	0.785

Question 04

One unit of A is made of two units of B and one unit of C. B is made of three units of D and one unit of F. C is composed of three units of B, one unit of D, and four units of E. D is made of one unit of E. Item C has a lead time of one week; Items A, B, E, and F have two-week lead times; and Item D has a lead time of three weeks. Lot-far-lot lot sizing is used for Items C, E, and F; lots of size 20, 40, and 160 are used for items A, B, and D, respectively. Items A, B, D, and E have on-hand (beginning) inventories of 5, 10, 100, and 100, respectively; all other items have zero beginning inventories. We are scheduled to receive 10 units of A in Week 3, 20 units of B in Week 7, 40 units of F in week 5 and 60 units of E in Week 2; there are no other schedule receipts. If 20 units of A are required in Week 10, use the low-level-coded bill of materials (product structure tree) to find the necessary planned order releases for all components. (20 Marks)

Question 05

(a) Define the term of "warehousing". (02 marks)

(b) List down PPE use in warehouse operation. (04 marks)

(c) Briefly Describe the term of "cubic utilization of warehousing" (06 marks)

(d) Describe in detail the Revers Logistics operation of warehousing. (08 marks)

Question 06

Discuss 5 critical factors that the manufacturing firms should take into consideration when designing a warehouse operational system that can lead to a firm's meeting the objectives of maximizing production flow and minimizing the cost of investment.

(20 marks)

Question 07

(a) What are the advantages and disadvantages of private warehousing?

(05 marks)

(b) Discuss why contract warehousing is becoming the preferred alternative for many organizations.

(05 marks)

(c) Discuss role of WMS in warehouse operation in large scale business

(05 marks)

(d) What is the importance of health and safety training in warehouse.

(05 marks)

Question 08

Technology and automation help to improve efficiency of warehousing in large scale logistics service providing organizations. Explain above statement with examples.

(20 marks)

----------END OF THE QUESTION PAPER----------

L 13

Colombo International Nautical and Engineering College
CINEC Campus
Faculty of Management, Humanities & Social Sciences
Department of Logistics & Transport
BSc in International Transportation Management and Logistics
Course CODE: COM550

32

Year 2 Semester II

SEMESTER END EXAMINATION

Maritime Law – MLAW0331

- This paper consists of EIGHT questions on FIVE (05) pages.
- Answer FIVE Questions including Question 01.
- Only non-programmable calculators are allowed.
- You may use appropriate graphs, diagrams, equation/s to prove or justify the answers.
- If you have any doubt as to the interpretation of the wording of a question, make your own decision, but clearly state it on the script.
- Write legibly

Date: 2018.09.18 Pass mark: 50% Time: 03 Hours

Question 01

Carriage of goods by sea is considered the main if not the largely used means of transportation of goods from one country to another especially where the two destinations are located at a distance separated by seas and oceans. Therefore, maritime law pays some significant importance for ships to maintain their 'seaworthiness' as a measure to safeguard human and proprietary interests while at sea. The Hague Visby rules, which is a widely acceded international legal instrument on carriage of goods by sea also lay much emphasis on this area especially stating in its Article III that "the carrier shall be bound before and at the beginning of the voyage to exercise due diligence to make the ship seaworthy". Considering the above statement, answer the following:

(a) Explain the term 'due diligence' (04 Marks)

(b) Describe the three (3) main components of 'seaworthiness' (06 Marks)

(c) Briefly discuss the leading case of *Hong Kong Fir Shipping Co., Ltd. v. Kawasaki Kisen Kaisha Ltd.* [(1961) EWCA Civ. 7] and explain how the court arrived at the decision of terming 'seaworthiness' as an innominate term (10 Marks)

Question 02

"General Average is a right of contribution as between the various interests in a sea voyage: the Ship; the Cargo, and Freight". Considering this statement, answer the following:

(a) Explain in your own words; the concept of General Average and how it works (05 Marks)
(b) State four (4) instances where General Average could be declared (05 Marks)
(c) State the main requisites for a General Average declaration (05 Marks)
(d) In the case of *Robinson v Price* [(1877) 2 QB 295] the court held that the cost of using cargo coal to stay afloat could be allowed in General Average. Provide reasons for such a decision (05 Marks)

Question 03

Contract of Carriage plays an important role in the subject of international trade law as well as in the maritime law. However, the frequently used Bill of Lading document cannot be considered such a contract in general but it is much widely accepted as 'an evidence of a contract'. In view of the said, answer the following:

(a) Name three (3) main types of Contracts of Carriage (03 Marks)
(b) Explain all those three main types of Contracts of Carriage briefly and separately (06 Marks)
(c) Describe main functions of a Bill of Lading separately (04 Marks)
(d) Provide brief explanations on following types of Bills of Lading:
    (i) Ocean or Master BL (02 Marks)

(ii) Received for Shipment BL (02 Marks)

(iii) Claused BL (02 Marks)

(e) State the main difference between a Bill of Lading and a Seaway Bill (01 Mark)

Question 04

(a) State in what ways a Ship can be owned (02 Marks)

(b) Article 91 of the United Nations Convention on Law of the Sea (UNCLOS) restricts Ship registrations seeking Flag of Convenience on the basis that there should exists of a 'genuine link'. Referring to this statement, answer the following (i) - (iii):

(i) Describe what meant by 'Flag of Convenience' (02 Marks)

(ii) State the way in which the 'genuine link' could be established (02 Marks)

(iii) Explain in your own words why Flag of Convenience should be / should not be encouraged (04 Marks)

(c) Considering the maritime regimes of Territorial Sea, Contiguous Zone, and Exclusive Economic Zone of a State; write a comprehensive Essay (appropriately with the marks given) on 'Freedom of Navigation' (10 Marks)

Question 05

"Limitation of liability is a right afforded to carriers in safeguarding the shipping industry as a whole. However, this right to limit can only be availed in circumstance where the carrier has not committed any purposeful / intentional act of his own that had resulted the damage or the loss. This right is generally extended to the servants and agents of the carrier as well within the context of maritime law". Considering this statement, answer the following:

(a) Explain in your own words, the expression of 'Right to Limit' (04 Marks)

(b) State the main three (3) regimes (with the year of adoption) that presently prevail in the sector of limitation of maritime claims (03 Marks)

(c) State three types of claims that would be subjected to limitation under the LLMC regimes (03 Marks)

(d) State three (3) types of claims that would be exempted from limitation under the LLMC regimes (03 Marks)

(e) Explain briefly in your own words how the constitution of a limitation fund would benefit a carrier alleged to have committed a loss or damage (07 Marks)

Question 06

(a) Describe the term 'Marine Pollution' (02 Marks)

(b) Identify the five (5) main types of Marine Pollution (05 Marks)

(c) Write a comprehensive (appropriately with the marks given) Essay on "The importance of SOLAS 1974 as a safety net at sea" (07 Marks)

(d) MT MARAMAX, a crude oil carrier went aground near the coast of Hambanthota, Sri Lanka resulting in the escape of 250,000 MT (Metric Tons) of cargo oil and 40,000 MT of Bunker C oil. This disaster caused severe pollution damage at sea as well as to the nearby coast spreading to an area of nearly 500 hectares. You being an expert in marine pollution; a Non-Governmental Activist Organization has consulted you in verifying the following. You are required to answer them;

(i) Who can be potential claimants? (02 Marks)

(ii) What law would apply to this scenario? (02 Marks)

(iv) What are attainable claims and non-attainable claims that the court might decide? (02 Marks)

Question 07

Write a comprehensive Essay on the dispute resolution mechanism in the area of Admiralty Law covering actions *in rem* and actions in *personam* as well as on ship arrest and on *mareva* injunctions with special emphasis on the Admiralty Jurisdiction Act No. 40 of 1983 in Sri Lanka (20 Marks)

Question 08

Write appropriately on any **FOUR** (04) of the following: (20 Marks)

(a) MARPOL 73/78
(b) Bunker Oil Convention 2001
(c) Fund Conventions 72/92
(d) Hague Visby Rules 1968
(e) Rotterdam Rules 2008
(f) UNCLOS 1982

----------END OF THE QUESTION PAPER----------

Library

Colombo International Nautical and Engineering College
CINEC Campus
Faculty of Management, Humanities & Social Sciences
Department of Logistics & Transport
BSc in International Transportation Management and Logistics
Course CODE: COM550

Year 2 Semester II

SEMESTER END EXAMINATION

Air cargo and Passenger Transportation – ACPT0305

- This paper consists of EIGHT questions on FOUR (04) pages.
- Answer FIVE Questions including Question 01.
- Only non-programmable calculators are allowed.
- You may use appropriate graphs, diagrams, equation/s to prove or justify the answers.
- If you have any doubt as to the interpretation of the wording of a question, make your own decision, but clearly state it on the script.
- Write legibly

Date: 2018.09.16 Pass mark: 50% Time: 03 Hours

Question 01: (Compulsory)

(a) Name five (05) pioneers who have contributed for the development of air transport industry (05 Marks)

(b) Briefly explain what is an airway bill (05 Marks)

(c) What are the three main axis of rotation of an aircraft and four forces that act on the surface of an aircraft? Name and Illustrate with the use of an diagram (10 Marks)

Question 02

(a) There are different weight categories which constitute for the weight buildup of an aircraft. Identify those weight categories and explain in details with the aid of a diagram the weight build of an aircraft (10 marks)

(b) Explain the development of Civil Aviation Authority from the Department of Civil Aviation and the change in Civil Aviation Management occurred when the State Functions were transferred into public corporations or limited liability company/companies with a use of a diagram. (10 Marks)

Question 03

(a) What is the role of a freight forwarder? Briefly explain (05 Marks)

(b) ULDs are expensive assets that are considered as aircraft parts. List advantages of ULDs. (05 Marks)

(c) There are different business models in the airline industry. What are these business models? Identify the unique characteristics of these business models with examples for each airline business model

(10 Marks)

Question 04

(a) Explain what are special air cargo in detail? You are required to provide at least 3 examples to support your answer. (10 Marks)

(b) List four types of air cargo carriers based on their air cargo business model (10 Marks)

Question 05

There are specific performance indicators used in the air transport industry in order to understand the performance of the airlines and its market. Virgin Atlantic Airlines is conducting a study to identify their performance in sectors originating from JFK (John F. Kennedy) in USA.

Virgin Atlantic Airlines is a domestic US carrier that operates a fleet of 5 aircraft between major cities in the country. The type of aircraft, number of passengers, aircraft capacity, city pairs and distance are given below. Assume that each aircraft operates once per day for all the 365 days in a year and assume that all passengers are revenue passengers.

Colombo International Nautical and Engineering College
CINEC Campus
Faculty of Management, Humanities & Social Sciences
Department of Logistics & Transport
BSc in International Transportation Management and Logistics
Course CODE: COM550

Aircraft	No. of passengers	Capacity of aircraft	City-pair	Distance
Boeing 737-800	190	200	JFK - ORD	1190 km
Boeing 737-800	180	210	JFK - MIA	1753 km
Boeing 737-800	210	250	JFK – ATL	1222 km
A330 - 300	375	380	JFK – LAX	1115 km
A330 - 300	400	410	JFK - SFO	4161 km

(a) What will be the ASK per year for SkyBlue airline? (07 Marks)
(b) What will be the RPK per year for SkyBlue airline? (07 Marks)
(c) What will be the passenger load factor per year for SkyBlue airline? (06 Marks)

Question 06

SHELL model and Reasons Model are tools used in air transport industry to understand the human factors present in the system which impact on safety. These models exist in the air transport industry can be used to support minimize human error and achieve the system's production goals. Select either one of these models and explain the model of your choice using an example which shows how these models can provide inputs to airlines/service providers to establish a safe air transportation system. (20 Marks)

Question 07

(a) XYZ Company is going to ship some cargo from Qatar to Saudi Arabia. The shipment consists of 10 boxes, each weighing 40 kgs, and each measuring 15*10*20 inches. Find the chargeable weight. (10 Marks)
(b) What are the possible security threats in the aviation industry? (05 Marks)
(c) What is the ICAO Annex related to aviation security (05 Marks)

Question 08

(a) Explain general commodity rate, Specific Commodity rate, Classification commodity rate. (10 Marks)

(b) Identify the parts of the below aircraft numbered from 1 – 12 (10 Marks)

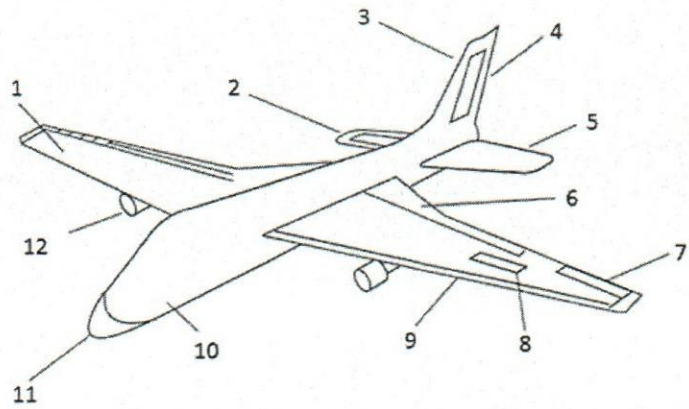

----------END OF THE QUESTION PAPER----------

February

32

Colombo International Nautical and Engineering College

CINEC Campus
Faculty of Management, Humanities & Social Sciences
Department of Logistics & Transport
BSc in International Transportation Management and Logistics
Course CODE: COM550

Year 2 Semester II

SEMESTER END EXAMINATION

Shipping Management – SPMG0306

- This paper consists of EIGHT questions on TWO (02) pages.
- Answer FIVE Questions including Question 01.
- Only non-programmable calculators are allowed.
- You may use appropriate graphs, diagrams, equation/s to prove or justify the answers.
- If you have any doubt as to the interpretation of the wording of a question, make your own decision, but clearly state it on the script.
- Write legibly

Date: 2018.09.14 Pass mark: 50% Time: 03 Hours

Question 01

Write down 10 points each with regard to transporting of goods requiring to be kept under cold and controlled temperatures by:

(a) "refer ships" and,
(b) "reefer containers" (20 Marks)

Question 02

Give an introductory explanation in brief to sea transportation with special emphasis to contract of carriage.

(20 Marks)

Question 03

What is meant by following notations in Bills of Lading:

- Received for shipment bill of lading
- Shipped on board bill of lading
- Clean bill of lading
- Claused bill of lading (20 Marks)

Question 04

Discuss in detail the following:

- B/L
- C/P

(20 Marks)

Question 05

Give short introductions to following:

- Hague rules
- Hague Visby rues
- Hamburg rules
- Rotterdam rules

(20 Marks)

Question 06

Discuss about the certificates a ship should be in possess of along with their importance.

(20 Marks)

Question 07

Explain your understanding about what a Classification Sociality is in relation to the maritime and shipping industry?

(20 Marks)

Question 08

(a) Explain the Transport & Logistics background of Sri Lanka and why shipping is more appropriate in that scenario (10 Marks)

(b) Explain the evolution of container shipping. Why container shipping is more suitable for Sri Lanka (10 Marks)

----------END OF THE QUESTION PAPER----------

Colombo International Nautical and Engineering College
CINEC Campus
Faculty of Management, Humanities and Social Sciences
Department of Logistics & Transport
BSc in International Transportation management and Logistics
Course CODE: COM550

32

Year 2 Semester II

SEMESTER END EXAMINATION

E-Commerce – ECOM0370

- This paper consists of EIGHT questions on FOUR (04) pages.
- Answer FIVE Questions including Question 01.
- Only non-programmable calculators are allowed.
- You may use appropriate graphs, diagrams, equation/s to prove or justify the answers.
- If you have any doubt as to the interpretation of the wording of a question, make your own decision, but clearly state it on the script.
- Write legibly

Date: 2018.09.12 Pass mark: 50% Time: 03 Hours

Question 01: (Compulsory)

(a) Distinguish between Business Model, Business Plan and an E-commerce Business Model (03 Marks)

(b) List down the key elements of a Business Model. Explain two (02) of the business models of your own in brief using examples. (05 Marks)

(c) List down the five (05) Revenue Models used by E-commerce associated organizations/companies. Explain two (02) of them in detail including appropriate examples (06 Marks)

(d) Explain in detail how e-commerce changes the industry structure, referring to the porters five forces theory (06 Marks)

Question 02

(a) Briefly explain the term " Internet" (03 Marks)

(b) Explain the **three** Technology Concepts, that are the basis for understanding the Internet. Support your answer with diagrams. (3*3 Marks)

(c) Discuss the Hourglass architecture with it's layers. (08 Marks)

Question 03

(a) Write down **5 methods** of E commerce payment and briefly explain them. (10 Marks)

(b) Write and explain 5 security threats which is available in an E commerce Environment. (10 Marks)

Question 04

(a) Explain 5 stages in Software Development Life Cycle. (2*5 Marks)

(b) What is a digital certificate? Explain (04 Marks)

(c) What is Encryption? Explain with a diagram. (06 Marks)

Question 05

Write the HTML code to generate a Web Page in the format given below:

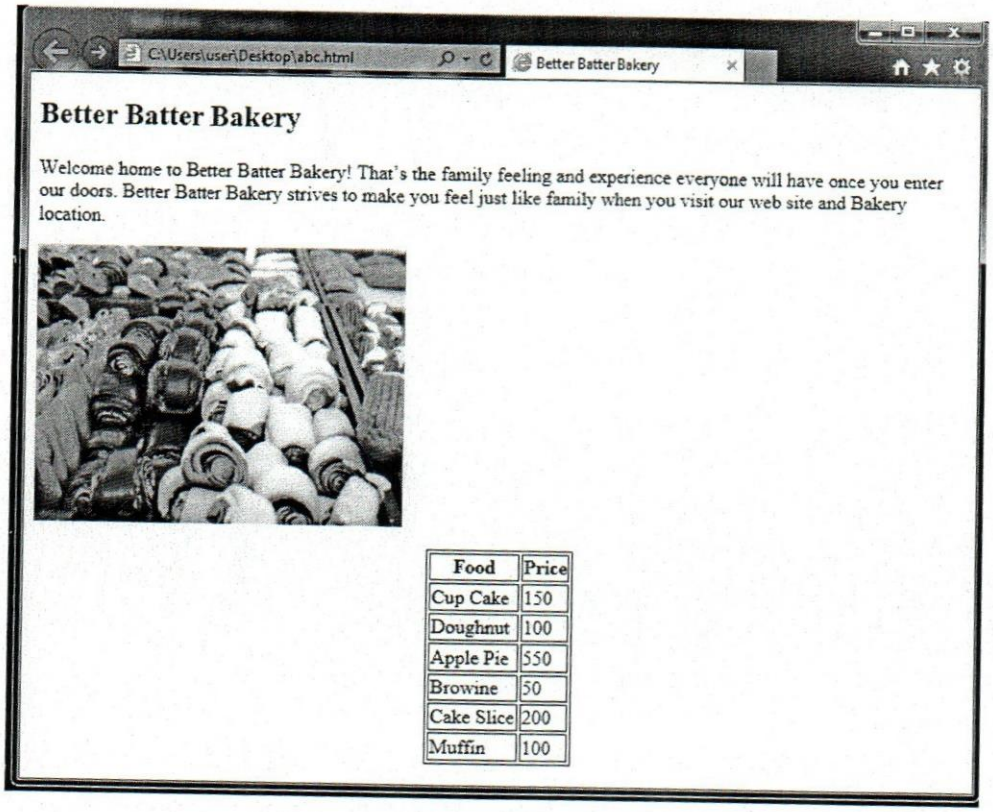

Consider the following while writing the HTML code:

(a) Title of the page should be Better Batter Bakery (02 Marks)

(b) Background color of the page should be "Gray". (02 Marks)

(c) Text style should be Time New Roman and color should be Green. (04 Marks)

(d) Picture used in the page is the file "Bakery.jpg" located in images subfolder in D drive. (04 Marks)

(e) Table should have a border and center aligned. (04 Marks)

(f) Add a list of other bakery items at the end of the page. List should be an unordered list. (04 Marks)

Question 06

(a) Explain the term E-commerce in your own words. (03 Marks)
(b) Briefly describe the advantages of E-commerce over traditional commerce or business (04 Marks)
(c) Describe in brief how business applications in the world have changed according to the ICT technology evolutions (05 Marks)
(d) List down the unique features of E-commerce. Explain two (02) of them in brief using appropriate examples (06 Marks)
(e) Distinguish between web 1.0 and web 2.0 (02 Marks)

Question 07

(a) What are unique Features of E-Commerce Technology and their Potential Ethical, Social, and Political Implications?
Your answer should contain at least five E-Commerce Technology Dimensions and details of those dimensions. (20 Marks)

Question 08

Write short notes on any **FOUR** (04) of the following

(a) M-commerce
(b) P2P network
(c) E-commerce and industry value chain
(d) Industry consortia
(e) Competitive advantage for the business over e-commerce
(f) Market creator

(5*4 Marks)

----------END OF THE QUESTION PAPER----------

Library

Colombo International Nautical and Engineering College
CINEC Campus
Faculty of Management, Humanities & Social Sciences
Department of Logistics & Transport
BSc in International Transportation Management and Logistics
Course CODE: COM550

37

Year 2 Semester II

SEMESTER END EXAMINATION

Transport Economics – ECON0319

- This paper consists of EIGHT questions on FIVE (05) pages.
- Answer FIVE (05) Questions including Question 01.
- Only non-programmable calculators are allowed.
- You may use appropriate graphs, diagrams, equation/s to prove or justify the answers.
- If you have any doubt as to the interpretation of the wording of a question, make your own decision, but clearly state it on the script.
- Write legibly
- Use MCQ sheet provided with the paper to answer Question 01.

Date: 2018.09.10 Pass mark: 50% Time: 03 Hours

Question 01 (Compulsory)

1. The registration of new motor vehicles decreased during the 2017 because of,
   A. Reduction in Loan to Value (LTV) ratios
   B. Tax revision on imports motor vehicles
   C. Marginal depreciation of the Sri Lankan rupee.
   D. All of above.

2. The real value of variable is calculated by,
   A. Price of the product multiplied by the quantity of the product
   B. Nominal value of the product divided by the price of the product.
   C. The nominal value multifield by the price of it
   D. None of above.

3. Demand for Cruise ships by tourist have
   A. Direct demand
   B. Derived demand
   C. Indirect demand
   D. Effective demand.

4. If the intercity bus service is a Luxury service to passengers, which of following does not causes to shifting demand curve of intercity bus services to right,
   A. Increase in the price of the intercity bus ticket
   B. Increase in the price of normal bus ticket
   C. Increase in the per capita GDP of the economy.
   D. Increase in the quality of the service of intercity bus services in Sri Lanka.

5. Generalize price a transport mode is included,
   A. Monetary cost
   B. Time cost
   C. Security cost
   D. All of above

6. Which one of following a common characterizes of each type of price discriminations,
   A. Output is sold to different consumers at different prices
   B. Output sold for the maximum price each consumer is willing to pay
   C. Price differs across the commodity unit not across consumers
   D. Price differ across the consumers not across commodity units.

7. Excess supply of transport not arises because of
   A. Technological improvement
   B. Operate according to time table in off peak time.
   C. Less competition
   D. Introduction of new facilities

The following are the research outcomes in relation to demand pattern.
Table 1.1 : summery of demand elasticities provided by Graham and Glaister

	Short run	Long run
Fuel demand with respect to fuel price	-0.25	-0.77
Fuel demand with respect to Income	0.47	0.93
Car trips with respect to car time	-0.60	-0.29

Answer Questions 8-10 using above Table1.1

8. Price elasticity of fuel demand is,
   A. More elastic in short run than long run
   B. Inelastic and positive.
   C. Inelastic in both time
   D. It violates the law of demand.

9. Fuel is being a
   A. Luxury product
   B. Necessity product
   C. Giffen product
   D. Superior product

10. Which one of following is incorrect,
   A. Fuel consumption is relative more response to change price than income in long run.
   B. Fuel consumption is relatively less response in long run than short run to the change in price.
   C. Car trips are elastic to the change in time in both time.
   D. None of above.

(20 Marks)

Question 02

(a) "well – functioning transport sector is essential for economy to be efficient" discuss
(10 Marks)

(b) Demand for rail transportation is depended on some factors. Justify your answer using appropriate examples.
(10 Marks)

Question 03

Table 3.1 gives an impression of many mean elasticity values used in a simulation model that describes the demand and supply of transport in London. The price elasticities shown in the table refer to the generalized price per trip. The generalized price not only includes the private car costs or the price for a ticket, but also the time costs converted into money prices.

Table 3.1: Examples of Elasticity used in London

	Stimulus (generalised price)		
Response	Car price	Bus price	Tube price
Car demand	-0.30	0.09	0.057
Bus demand	0.17	-0.64	0.13
Tube demand	0.056	0.20	-0.50

Tube is the London Underground Transit

(a) Explain the meaning of each elasticity coefficients and name the type of elasticity. (12 Marks)

(b) Discuss the importance of knowing each of the elasticity values for decision making in transport planning and policy. (08 Marks)

Question 04

(a) Explain the meaning of Transport supply? (04 Marks)

(b) What are the determinates of supply of STB buses in the economy? (06 Marks)

(c) What do mean by elasticity of transport supply? Explain that factors which are determine the elasticity of supply with examples. (10 Marks)

Question 05

(a) Why pricing in shipping could be more complicated (03 Marks)
(b) What factors influenced the supply of shipping (SoS) (04 Marks)
(c) What are the Surcharges or additional costs involved in shipping. Explain two of them in detail (13 Marks)

Question 06

(a) What do you meant by price discrimination? (05 Marks)
(b) "Firms which are in a perfectly competitive market can't do price discrimination" do you agree? Explain (05 Marks)
(c) Distinguish between advantages and disadvantages of Price discriminations (05 Marks)

(d) What do you meant by product differentiation in transport (05 Mark)

Question 07

In transport economy it can be seen negative externalities and positive externalities. The government intervenes to control and promote those externalities through their economic policies. Justify your answer with appropriate examples and diagrams. (20 Marks)

Question 08

Write short notes on any **FOUR** (04) of the followings.

(a) Low cost carries in airline industry.
(b) Economic forecasting
(c) Public Private partnership programme in Sri Lanka
(d) Financial appraisal in infrastructure development
(e) Cost classification in railway.

(20 Marks)

----------END OF THE QUESTION PAPER----------

Library

Colombo International Nautical and Engineering College

CINEC Campus
Faculty of Management and Social Sciences
Department of Logistics & Transport
BSc in International Transportation Management and Logistics
Course CODE: COM550

06 A

Year 2 Semester II
REPEAT EXAMINATION
Maritime Law – MLAW0331

- This paper consists of EIGHT questions on FOUR (04) pages.
- Answer FIVE questions including question 01.
- Only non-programmable calculators are allowed.
- You may use appropriate graphs, diagrams, equation/s to prove or justify the answers.
- If you have any doubt as to the interpretation of the wording of a question, make your own decision, but clearly state it on the script.
- Write legible.

Date: 2017.12.06 Pass mark: 50% Time: 03 Hours

Question 01: (Compulsory)

A Charter Party is a contract by which an entire ship, or some principal part thereof, is let to a merchant for the conveyance of goods on a determined voyage to one or more places. A contract of affreightment in writing, by which the owner of a ship lets the whole or a part of her to a merchant, for the conveyance of goods on a particular voyage, in consideration of the payment of freight. It is a written agreement, not usually under seal, by which a ship-owner lets an entire ship, or a part of it, to a merchant for the conveyance of goods, binding himself to transport them to a particular place for a sum of money which the merchant undertakes to pay as freight for their carriage.

Explain the above in the context of;

(a) Description of a Ship (05 Marks)
(b) Types of Charter Parties (05 Marks)
(c) Voyage Charter Party (05 Marks)
(d) Relationship between Charter Party and Bills of Lading (05 Marks)

Question 02

In actual sense, a Bill of Lading cannot be called a contract of carriage. It is regarded as an evidence of a contract. However, it provides detailed information as to the gods loaded and contain certain contractual term. If the shipper wishes to use only a part of the vessel, it is usually the practice of receiving a bill of lading. The actual contract is made at the time of booking space on the vessel through a booking note.

Discuss this statement with reference to

(a) Freight (05 Marks)
(b) Common carrier (05 Marks)
(c) Concept of freight (05 Marks)
(d) Shipper (05 Marks)

Question 03

Safety of Life at Sea is not a concept which emerged in recent times but emerged in more than hundred years ago. Explain the international regulatory provisions of the concept of Safety of Life at Sea in modern day context. (20 Marks)

Question 04

At the start of voyage, the vessel must be in a state to perform its obligations in safety in relation to the vessel and the goods on board. The ship owner is obliged to make his ship fit for the carriage of cargo for the voyage. He is therefore under the duty to make his ship 'seaworthy', which indeed a 'warranty' that he should give towards the cargo owners. Explain Above in the Concept of Seaworthiness. (20 Marks)

06 X

Question 05

"General average is a right of contribution as between the various interests in a sea voyage: the ship; the cargo owners; and the party entitled to freight. This right arises whenever extra ordinary sacrifices have been made or extra ordinary expenses incurred by one interests in the common adventure" (quoted)

Explain the above statement in view of General Average (20 Marks)

Question 06

Salvage service in the view of the Court of Admiralty is;

"A Service Which Confers A Benefit By Saving Or Helping To Save A Recognized Subject Of Salvage When In Danger From Which It Cannot Be Extricated Unaided, If And So Far As The Rendering Of Such Service Is Voluntarily In The Sense Of Being Attributable Neither To A Pre-existing Obligation Nor Solely For The Interests Of The Salvor."

Explain the above statement in view of Salvage (20 Marks)

Question 07

Article 1 of the International Convention for the Unification of Certain Rules relating to the Arrest of Sea-Going Ships, Brussels, defines "Maritime Claim" as under:
"Maritime Claim" means a claim arising out of one or more of the following :
(a) damage caused by any ship either in collision or otherwise;
(b) loss of life or personal injury caused by any ship or occurring in connection with the operation of any ship;
(c) salvage;
(d) agreement relating to the use or hire of any ship whether by charter party or otherwise;

(e) agreement relating to the carriage of goods in any ship whether by charter party or otherwise;
(f) loss of or damage to goods including baggage carried in any ship;
(g) general average;
(h) bottomry;
(i) towage;
(j) pilotage;
(k) goods or materials wherever supplied to a ship for her operation or maintenance;
(l) construction, repair or equipment of any ship or dock charges and dues;
(m) wages of Masters, Officers, or crew;
(n) Master's disbursements, including disbursements made by shippers, charterers or agents on behalf of a ship or her owner;
(o) disputes as to the title to or ownership of any ship;
(p) disputes between co-owners of any ship as to the ownership, possession employment or earnings of that ship;
(q) the mortgage or hypothecation of any ship.

(Explain)

(20 Marks)

Question 08

Write Short Notes on following;

(a) Freedom of Navigation (05 Marks)
(b) Genuine Link (05 Marks)
(c) Disponent Owner (05 Marks)
(d) Ship Operator (05 Marks)

----------END OF THE QUESTION PAPER----------

Library

Colombo International Nautical and Engineering College

CINEC Campus
Faculty of Management, Humanities & Social Sciences
Department of Logistics & Transport
BSc in International Transportation Management and Logistics
Course CODE: COM550

CINEC MARITIME CAMPUS LIBRARY

Year 2 Semester II

REPEAT EXAMINATION

Shipping Management – SPMG0306

- This paper consists of EIGHT questions on THREE (03) pages.
- Answer FIVE Questions including Question 01.
- Only non-programmable calculators are allowed.
- You may use appropriate graphs, diagrams, equation/s to prove or justify the answers.
- If you have any doubt as to the interpretation of the wording of a question, make your own decision, but clearly state it on the script.
- Write legibly

Date: 2017.12.05 Pass mark: 50% Time: 03 Hours

Question 01: (Compulsory)

(a) Who are the key players in the shipping industry (05 Marks)
(b) Explain the key roles of a shipping agent and container yard (07 Marks)
(c) Explain the role played by exporters in performing a shipment. (08 Marks)

Question 02

Shipping Line: Continental Shipping Line
Consignee: 'To order'
Notify Party: Ceylon Soft Toys Importers Ltd.,

Ceylon Soft Toys Importers Ltd., presented the first original and requested for the cargo from the Shipping Line. There was only one endorsement appearing on the Original Bill of Lading and that was from Ceylon Soft Toys Importers. The cargo was released to Ceylon Soft Toys Importers. After one month the shipper sued the Shipping Line for long delivery of cargo. Explain how the Courts would handle this case.

(20 Marks)

Question 03

'The Letter of Credit is playing a major role in the sphere of international trade'. Discuss. (20 Marks)

Question 04

"Shipping is important for Sri Lanka as the key mode of international transportation" write an essay on this topic (20 Marks)

Question 05

'The Bill of Lading is not a contract but only evidence of a contract'. Discuss. (20 Marks)

Question 06

Please write short noted on the below:

(i) Seaway Bill of Lading (05 Marks)
(ii) Background for the introduction of the US Customs 24 hour advanced manifesting Rule. (05 Marks)
(iii) Switch Bill of Lading (05 Marks)
(iv) Change of Destinations (05 Marks)

Question 07

(a) Explain why Container shipping is important to Sri Lanka (10 Marks)

(b) Transshipment cargo plays a major role with respect to port of Colombo. Elaborate your view on this (10 Marks)

Colombo International Nautical and Engineering College
CINEC Campus
Faculty of Management, Humanities & Social Sciences
Department of Logistics & Transport
BSc in International Transportation Management and Logistics
Course CODE: COM550

Question 08

The growth of e-commerce plays a major role in the development of the Shipping Industry in Sri Lanka. Do you agree with this statement or not. Make your own argument. (20 Marks)

----------END OF THE QUESTION PAPER----------

Colombo International Nautical and Engineering College

CINEC Campus

Faculty of Management, Humanities & Social Sciences

Department of Logistics & Transport

BSc in International Transportation Management and Logistics

Course CODE: COM550

14

CINEC MARITIME CAMPUS

Year 2 Semester II

REPEAT EXAMINATION

Transport Economics – ECON0319

- This paper consists of EIGHT questions on THREE (03) pages.
- Answer FIVE Questions including Question 01.
- Only non-programmable calculators are allowed.
- You may use appropriate graphs, diagrams, equation/s to prove or justify the answers.
- If you have any doubt as to the interpretation of the wording of a question, make your own decision, but clearly state it on the script.
- Write legibly

Date: 2017.12.04 Pass mark: 50% Time: 03 Hours

Question 01 (Compulsory)

(a) Explain the meaning of derive demand in transport and logistics. (05 Marks)

(b) What are the importance of transport and logistics services in the economic system? (15 Marks)

Question 02

(a) Explain law of demand related to the transport market (05Marks)

(b) Explain factors which are influenced to the change in transport demand (10 marks)

(c) What is meant by elasticity of travel demand? Explain. (05 Marks)

Question 03

(a) What do you mean by excess supply? illustrate with diagram and explain the reasons for excess supply in the transport field (10 Marks)

(b) What do mean by elasticity of transport supply? Explain that factors which are determine the elasticity of supply with examples. (10 Marks)

Question 04

(a) You are providing following results obtained from a research. Interpret results in table.

variable	With respect to	Short run	Long run
Diesel consumption	Petrol price	-0.3	-1.2
Vehicle traffic	Petrol price	-0.16	-0.3
Petrol consumption	income	1.3	0.8
Diesel Consumption	income	0.7	1.6

(10 Marks)

(b) Describe the relationship between operator's revenue and elasticity of demand. (10 Marks)

Question 05

(a) What is the most important component (out of 7 P's of Marketing Mix) to a shipping line (03 Marks)

(b) Identify the factors that influence in shipping supply and explain two factors (09 Marks)

(c) What is the influence of derived demand in Shipping. (08 Marks)

Question 06

The government intervenes to control and promote those externalities in transport market through their economic policies. Justify your answer with appropriate examples and diagrams. (20 Marks)

Question 07

(a) Classify the cost of automobile with examples. (10 Marks)

(b) Classify the cost of airline services with examples (10 Marks)

14

Question 08

Write short notes on any four (4) of the followings.

(a) Cost in railway industry.
(b) Product differentiation in railway
(c) Supply curve of shipping industry
(d) Law cost carriers in airline
(e) Price discrimination

(20 Marks)

----------END OF THE QUESTION PAPER----------

Library

25

Colombo International Nautical and Engineering College

CINEC Campus
Faculty of Management, Humanities & Social Sciences
Department of Logistics & Transport
BSc in International Transportation Management and Logistics
Course CODE: COM550

CINEC MARITIME CAMPUS
Not To Be Taken Away Without Proper Authorization
LIBRARY

Year 2 Semester II

SEMESTER END EXAMINATION

Inventory and Warehouse Management – IWMG0348

- This paper consists of EIGHT questions on FOUR (04) pages.
- Answer FIVE Questions including Question 01.
- Only non-programmable calculators are allowed.
- You may use appropriate graphs, diagrams, equation/s to prove or justify the answers.
- If you have any doubt as to the interpretation of the wording of a question, make your own decision, but clearly state it on the script.
- Write legibly
- Supporting documents are attached to the question paper.

Date: 2017.09.28 Pass mark: 50% Time: 03 Hours

Question 01: (Compulsory)

(a) A large logistics firm uses an average of 40 boxes of copier paper a day. The firm operates 260 days a year. Storage and handling costs for the paper are $30 a year per box, and it costs approximately $60 to order and receive a shipment of paper.

(i) What order size would minimize the sum of annual ordering and carrying costs? (02 Marks)

(ii) Compute the total annual cost using your order size from part (a). (03 Marks)

(iii) The office manager is currently using an order size of 200 boxes. The partners of the firm expect the office to be managed "in a cost-efficient manner." Would you recommend that the office manager use the optimal order size instead of 200 boxes? Justify your answer. (05 Marks)

(b) A distributor for a tire company expects to sell 9,600 steel-belted radial tires of a certain size and tread design next year. Annual carrying cost is Rs. 16 per tire, and ordering cost is Rs. 75. The distributor operates 288 days a year.

(i) What is the EOQ? (02 Marks)

(ii) How many times per year does the store reorder? (02 Marks)

(iii) What is the length of an order cycle? (03 Marks)

(iv) What is the total annual cost if the EOQ quantity is ordered?

(03 Marks)

Question 02

(a) The Friendly Sausage Factory (SFS) can produce sausage buns at a rate of 200 per day. FSF supplies sausage buns to local restaurants at a steady rate of 250 per day. The cost to prepare the equipment for producing sausage buns is $66. Annual holding costs are 45 cents per sausage bun. The factory operates 300 days a year. Find.

(i) The optimal run size. (03 Marks)

(ii) The number of runs per year (03 Marks)

(iii) The length (in days) of a run. (03 Marks)

(b) A mail-order house uses 18,000 packs a year. Carrying costs are 60 cents per pack a year, and ordering costs are $96. The following price schedule applies. Determine

(i) Then optimal order quantity. (08 Marks)

(ii) The number of orders per year. (03 Marks)

Table 2.01

Number of Packs	Price per Pack ($)
1,000 to 1,999	1.25
2,000 to 4,999	1.20
5,000 to 9,999	1.15
10,000 or more	1.10

Question 03

(a) The house keeping section of a motel uses approximately 400 washcloths per day. The actual number tends to vary with the number of guests on any given night. Usage can be approximated by a normal distribution that has a mean of 400 and a standard deviation of 9 washcloths per day. A linen supply company delivers towels and washcloths with a lead time of three days. If the motel policy is to maintain a stock out risk of 2 percent, what is the minimum number of washcloths that must

MARITIME CAMPUS LIBRARY Not To Be Taken Away Without Proper Authorization

be on hand at reorder time, and how much of that amount can be considered safety stock? (06 Marks)

(b) The motel in the proceeding example uses approximately 600 bars of soap each day, and this tends to be fairly constant. Lead time for soap delivery is normally distributed with a mean of six days and a standard deviation of two days. A service level of 90 percent is desired.

(i) Find the Re Order Point (ROP). (04 Marks)

(ii) How many days of supply are on hand at the ROP? (04 Marks)

(c) The motel replaces broken glasses at a rate of 25 per day. In the past, this quantity has tended to vary normally and have a standard deviation of 3 glasses per day. Glasses are ordered from a Cleveland supplier. Lead time is normally distributed with an average of 10 days and a standard deviation of 2 days. What ROP should be used to achieve a service level of 95 percent? (06 Marks)

Question 04

You have just received an order for 1250 chairs which is to be delivered at the start of week 9 of your schedule. In addition to complete chairs part E is sold separately for repair. There is an order for 380 part Es at the start of week 9. The following table lists parts/ components needed to assemble a chair, lead times (in weeks) and quantities on hand.

Table 4.01

Item	Lead Time	Quantity on hand	Components
Chair	2	50	D(1), E(2), C(1)
C	1	40	D(1), F(2)
D	1	30	E(1), F(1)
E	1	30	-
F	1	40	-

(a) Construct a product structure tree and a master schedule (02 Marks)

(b) Use low-level-coded bills of material to find the necessary planed order releases for all components. (Use lot for lot ordering) (18 Marks)

Question 05

(a) Define the term of "warehousing". (03 marks)
(b) List down main four objectives of warehouse management. (04 marks)
(c) Briefly explain main functions of warehouse management. (05 marks)
(d) Describe in detail the economic benefit of warehousing. (08 marks)

Question 06

(a) Describe the term of "cubic utilization of warehousing" (03 marks)
(b) Illustrate of consolation and breakbulk arrangements of warehouse operation. (05 marks)
(c) Seasonal storage provides direct and indirect benefits by accommodating production or demand. Explain above statement with examples. (12 marks)

Question 07

(a) Define the term of WMS. (02 marks)
(b) what are the factors logisticians need to consider when deciding on site selection of warehousing. (06 marks)
(c) Briefly explain the role of warehousing in E- commerce. (12 marks)

Question 08

(a) List down three personal protection equipment (PPE) use in warehouse. (03 marks)
(b) Explain how reverse logistics activities help to improve service level of warehouse. (04 marks)
(c) Write down difference between active storage and extended storage with examples. (05 marks)
(d) Technology and automation help to improve efficiency of warehousing in large scale logistics service providing organizations. Explain above statement with examples. (08 marks)

----------END OF THE QUESTION PAPER----------

Colombo International Nautical and Engineering College

CINEC Campus

Faculty of Management, Humanities & Social Sciences

Department of Logistics & Transport

BSc in International Transportation Management and Logistics

Course CODE: COM550

30

CINEC MARITIME CAMPUS
Not To Be Taken Away Without Proper Authorization
LIBRARY

Year 2 Semester II

SEMESTER END EXAMINATION

Maritime Law – MLAW0331

- This paper consists of EIGHT questions on FOUR (04) pages.
- Answer FIVE Questions including Question 01.
- Only non-programmable calculators are allowed.
- You may use appropriate graphs, diagrams, equation/s to prove or justify the answers.
- If you have any doubt as to the interpretation of the wording of a question, make your own decision, but clearly state it on the script.
- Write legibly

Date: 2017.09.26 Pass mark: 50% Time: 03 Hours

Question 01: (Compulsory)

The major operation under a Charter Party is to find continued and suitable employment for the ships to maximise revenue earnings. These operations are therefore primarily concerned with finding suitable cargoes for ships irrespective of whether the ships are owned or are hired.

Explain the above in the context of;

(a) Description of a Ship (05 Marks)

(b) Types of Charter Parties (05 Marks)

(c) Voyage Charter Party (05 Marks)

(d) Relationship between Charter Party and Bills of Lading (05 Marks)

Question 02

In actual sense, a Bill of Lading cannot be called a contract of carriage. It is regarded as an evidence of a contract. However, it provides detailed information as to the gods loaded and contain certain contractual term. If the shipper wishes to use only a part of the vessel, it is usually the practice of receiving a bill of lading. The actual contract is made at the time of booking space on the vessel through a booking note.

Discuss this statement with reference to

(a) Three attributes of Bill of lading (10 Marks)
(b) Obligations of the Carrier (10 Marks)

Question 03

Safety of Life at Sea is not a concept which emerged in recent times but emerged in more than hundred years ago. Explain the international regulatory provisions of the concept of
Safety of Life at Sea in modern day context. (20 Marks)

Question 04

Seaworthiness is a primary condition a ship must satisfy for its navigation. Explain the concept of seaworthiness in the light of International Maritime Organization certification. (20 Marks)

Question 05

(a) "Within the context of commercial shipping, 'Maritime Casualty' refers to anything involving any commercial vessel that causes significant harm or material damage within the navigable waters of a State resulted due to un-seaworthiness or inefficiency of such vessel"
State whether you would agree with the above statement and identify three (3) main causes that give rise to maritime casualty. (10 Marks)

(b) The International Convention for the Prevention of Pollution from Ships (MARPOL) is the main international convention covering prevention of pollution of the marine environment by ships from operational or accidental causes. (Define)

(10 Marks)

Question 06

(a) "General average is a right of contribution as between the various interests in a sea voyage: the ship; the cargo owners; and the party entitled to freight. This right arises whenever extra ordinary sacrifices have been made or extra ordinary expenses incurred by one interests in the common adventure" (quoted)

Explain the above statement in view of General Average (10 Marks)

(b) Salvage service in the view of the Court of Admiralty is;

"A Service Which Confers A Benefit By Saving Or Helping To Save A Recognized Subject Of Salvage When In Danger From Which It Cannot Be Extricated Unaided, If And So Far As The Rendering Of Such Service Is Voluntarily In The Sense Of Being Attributable Neither To A Pre-existing Obligation Nor Solely For The Interests Of The Salvor."

Explain the above statement in view of Salvage (10 Marks)

Question 07

(a) "Nationality is one of the most important elements in the operation of ships. It determines the rights and obligations under the law of the State in which such ship is registered. Historically, ships belonged to the State whose flag it flies during voyage. Such State thereby has the power to exercise 'flag State jurisdiction' over such vessel.

States grant its nationality to a ship once it is registered in its own registry. Therefore, the State of registration can be determined from the flag it flies and vice-versa. "(Explain)

(10 Marks)

(b) "Other than Registration; the ownership factor is another important element in shipping. It would not only enable the identification of the 'owner' but also define the nature of ownership, other matters surrounding the operation of the ship such as whether the ship is under Charter Party, mortgage or some other category as to its operation and use. All ship registers require some information on ownership to be provided at time of presenting an application for registration. This would vary from requiring detailed information related to vessel ownership to deciding on the nationality factor." (Explain)

(10 Marks)

Question 08

Write Short Notes on following;

(a) Freedom of Navigation (05 Marks)

(b) Genuine Link (05 Marks)

(c) Disponent Owner (05 Marks)

(d) Ship Operator (05 Marks)

----------END OF THE QUESTION PAPER----------

Colombo International Nautical and Engineering College

CINEC Campus
Faculty of Management, Humanities and Social Sciences
Department of Logistics & Transport
BSc in International Transportation Management and Logistics
Course CODE: COM550

CINEC MARITIME CAMPUS
Not To Be Taken Away Without Proper Authorization
LIBRARY

Year 1 Semester II
SEMETSER END EXAMINATION
Macroeconomics – ECON0317

- This paper consists of EIGHT questions on FIVE (05) pages.
- Answer FIVE Questions including Question 01.
- Only non-programmable calculators are allowed.
- You may use appropriate graphs, diagrams, equation/s to prove or justify the answers.
- If you have any doubt as to the interpretation of the wording of a question, make your own decision, but clearly state it on the script.
- Write legibly

Date: 2017.09.25 Pass mark: 50% Time: 03 Hours

Question 01 (Compulsory)

(a) Following are the information from the national income accounts for a hypothetical economy:

Table 1.01

Information	RS millions
Gross Domestic Product	6000
Gross Investments (I)	800
Net Investments	200
Total Consumption expenditure (C)	4000
Government expenditure (G)	1100
Government Fiscal surplus	30
GDP deflator	110

Based on the above information, calculate,

(i) Net Domestic product at market prices
(ii) Net exports
(iii) The tax revenue of the government
(iv) Personal disposable income
(v) Real Gross Domestic product

(5*3 Marks)

(b) There are three kinds of policies that the government has used to influence the macro economy. Briefly explain those policies. (05 Marks)

Question 02

(a) Explain John Maynard Keynes' perspective about what he called the "autonomous expenditure" within an economy.

(04 Marks)

(b) Following information are given for a hypothetical Economy that consists of 4 sectors

Table 2.01

Components	RS Millions
C	2000 +0.7yd
G	300
I	150
T	400+0.1y
Tr	50
NX	-200

Based on the above information calculate,

(i) The value of the equilibrium out put
(ii) The total consumption at Equilibrium level of income
(iii) The Fiscal deficit / surplus of the country
(iv) The value of new Equilibrium output if investments increase by RS 50 million

(4*4 Marks)

Question 03

Following is an extract from the Central Bank report 2016

> The general price level, as measured in terms of both the National Consumer Price Index (NCPI, 2013=100) and Colombo Consumer Price Index (CCPI, 2013=100), compiled by the Department of Census and Statistics (DCS), followed an overall increasing trend, with mixed movements during 2016

(a) Briefly explain the reasons that may have been affected to increase the general price levels of goods and services in 2016 (05 Marks)
(b) Clearly explain the positive and negative impacts of inflation to the different parties in the country (05 Marks)
(c) Briefly explain the reasons for existence of unemployed workers even during good economic conditions (05 Marks)

Following data are extracted from central bank report 2016

Table 3.01

Year	Employed population (Millions)	Unemployed population (Millions)
2015	7.8	0.38
2016	7.9	0.36

(d) Calculate the Unemployment rate for 2015 and 2016 (05 Marks)

Question 04

(a) List the main functions of a commercial bank (04 Marks)

(b) Think about a **Commercial Banking system** of a country. A person deposits RS 1000. Statutory reserve ratio is 20%.

Required,

(i) Initial Statement of Financial Position
(ii) Required Statutory Reserve
(iii) Total amount of loans provided by the banking system
(iv) Final statement of Financial position after the process of money creation

(4*3 Marks)

(c) Clearly explain the practical limitations of the process of money creation

(04 Marks)

Question 05

(a) Discuss on how, central bank of Sri Lanka is responsible on creating a favourable environment for depositors and investors in the economy (04 Marks)

(b) Briefly explain the following agency functions of Central Bank

(i) Foreign exchange Management
(ii) Public debt management
(iii) Acting as bankers' bank
(iv) Acting as the lender of last resort (4*3 Marks)

(c) Briefly explain about the different qualitative techniques used by the central bank to control the money supply of the country (04 Marks)

Question 06

The sustainable development Goals (SDG s), otherwise known as the global goals, are universal call to action to end poverty, protect the planet and ensure that all people enjoy peace and prosperity (source: UNDP)

(a) Clearly explain the following indicated sustainable development goals with examples
   (i) No poverty
   (ii) Gender equality
   (iii) Clean water and sanitation
   (iv) Affordable and clean energy
   (v) Responsible consumption and production (5*3 Marks)

(b) Explain 3 criteria (with sub criteria) which are used to measure the Economic development of a country with appropriate examples (05 Marks)

Question 07

(a) Briefly explain the main functions of money (04 Marks)
(b) Clearly explain the relationship between Income of a consumer and money demand for transaction motive (02 Marks)
(c) Following information are provided for you related to the money supply of Sri Lanka

Table 7.01

	RS Billions (2016)
Currency held by Public	41.4
Currency held by commercial banks	18.9
Commercial banks' deposits in central bank	121.5
Demand deposits of public in commercial banks	20.2
Time and savings deposits held by public in commercial banks	704.7
Money multiplier M2b	6.31

Calculate,
(i) M1, M2 and M2b
(ii) Reserve money (10 Marks)

(d) Briefly explain how money supply plays a crucial role when determining price level and the interest rates (04 Marks)

Question 08

(a) Financial Derivatives are major financial assets those can be used to hedge risks, rather than earning profits" Do you agree with the statement? Discuss

(05 Marks)

(b) Explain the support of **Financial infrastructures** for a country's financial system (06 Marks)

(c) Select the following components of **Sri Lankan financial system** and clearly explain those with appropriate examples

(i) Regulatory authority
(ii) Financial markets
(iii) Financial instruments (3*3 Marks)

----------*END OF THE QUESTION PAPER*----------

Colombo International Nautical and Engineering College
CINEC Campus
Faculty of Management, Humanities & Social Sciences
Department of Logistics & Transport
BSc in International Transportation Management and Logistics
Course CODE: COM550

CINEC MARITIME CAMPUS
Not To Be Taken Away Without Proper Authorization
LIBRARY

92

Year 2 Semester II

SEMESTER END EXAMINATION

Air cargo and Passenger Transportation – ACPT0305

- This paper consists of EIGHT questions on FOUR (04) pages.
- Answer FIVE Questions including Question 01.
- Only non-programmable calculators are allowed.
- You may use appropriate graphs, diagrams, equation/s to prove or justify the answers.
- If you have any doubt as to the interpretation of the wording of a question, make your own decision, but clearly state it on the script.
- Write legibly

Date: 2017.09.24 Pass mark: 50% Time: 03 Hours

Question 01: (Compulsory)

(a) Name three passenger airline alliances exist in the air transport industry (03 Marks)

(b) Draw the weight buildup of an aircraft and name each weight category (04 Marks)

(c) What are the three main axis of rotation of an aircraft and four forces that act on the surface of an aircraft? Name and Illustrate with the use of an diagram (10 Marks)

(d) What are the two main areas that the airport components can be categorized into (03 Marks)

Question 02

(a) Name five (05) pioneers who have contributed to the development of the air transport industry (05 Marks)

(b) Explain the development of Civil Aviation Authority from the Department of Civil Aviation and the change in Civil Aviation Management occurred when the State Functions were transferred into public corporations or limited liability company/companies with a use of a diagram. (15 Marks)

Question 03

(a) Airline industry is an oligopolistic market. Explain characteristics of an oligopolistic market in detail (10 Marks)

(b) What is Chicago Convention and its implications? Explain breifly (05 Marks)

(c) ULDs are expensive assets that are considered as aircraft parts. List advantages of ULDs. (05 Marks)

Question 04

(a) There are three main airline business models exist in the present day air transport industry. What are these business models? Identify the unique characteristics of these business models with at least two examples for each airline business model (15 Marks)

(b) List four types of air cargo carriers based on their air cargo business model (05 Marks)

Question 05

There are specific performance indicators used in the air transport industry in order to understand the performance of the airlines and its market. SkyBlue Airline is conducting a study to identify their performance in sectors originating from JFK (John F. Kennedy) in USA.

SkyBlue is a domestic US carrier that operates a fleet of 5 aircraft between major cities in the country. The type of aircraft, number of passengers, aircraft capacity, city pairs and distance are given below. Assume that each aircraft operates once per day for all the 365 days in a year and assume that all passengers are revenue passengers.

CINEC MARITIME CAMPUS LIBRARY Not To Be Taken Away Without Proper Authorization

Table 5.01

Aircraft	No. of passengers	Capacity of aircraft	City-pair	Distance
Boeing 737-800	190	202	JFK - ORD	1190 km
Boeing 737-800	200	210	JFK - MIA	1753 km
Boeing 737-800	210	240	JFK – ATL	1222 km
A330 – 300	380	390	JFK – LAX	1115 km
A330 – 300	410	410	JFK - SFO	4161 km

(a) What will be the ASK per year for SkyBlue airline? (07 Marks)
(b) What will be the RPK per year for SkyBlue airline? (07 Marks)
(c) What will be the passenger load factor per year for SkyBlue airline? (06 Marks)

Question 06

SHELL model and Reasons Model are tools used in air transport industry to understand the human factors present in the system which impact on safety. These models exist in the air transport industry can be used to support minimize human error and achieve the system's production goals. Select either one of these models and explain the model of your choice using an example which shows how these models can provide inputs to airlines/service providers to establish a safe air transportation system. (20 Marks)

Question 07

(a) ABC Company is going to ship some cargo from Doha to Abu Dhabi, UAE. The shipment consists of 6 boxes, each weighing 20 kgs, and each measuring 15*10*20 inches. Find the chargeable weight. (10 Marks)

(b) Explain general commodity rate, Specific Commodity rate, Classification commodity rate. (10 Marks)

Question 08

(a) Identify the freedoms of the air used when granting traffic rights to States. Explain the 9 freedoms of the air. (10 Marks)

(b) Identify the parts of the below aircraft numbered from 1 – 12 (10 Marks)

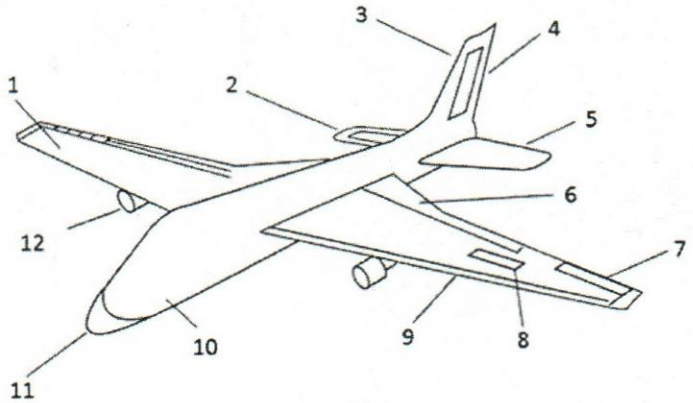

----------END OF THE QUESTION PAPER----------

Library

Colombo International Nautical and Engineering College

CINEC Campus
Faculty of Management & Social Sciences
Department of Logistics & Transport
BSc in International Transportation Management and Logistics
Course CODE: COM550

CINEC MARITIME CAMPUS Not To Be Taken Away Without Proper Authorization LIBRARY

Year 2 Semester II

SEMESTER END EXAMINATION

Shipping Management – SPMG0306

- This paper consists of EIGHT questions on THREE (03) pages.
- Answer FIVE Questions including Question 01.
- Only non-programmable calculators are allowed.
- You may use appropriate graphs, diagrams, equation/s to prove or justify the answers.
- If you have any doubt as to the interpretation of the wording of a question, make your own decision, but clearly state it on the script.
- Write legibly

Date: 2017.09.22 Pass mark: 50% Time: 03 Hours

Question 01: (Compulsory)

(a) Identify the key players in commercial shipping business (05 Marks)
(b) Select two key players of your own choice and discuss their duties and responsibilities in details. (15 Marks)

Question 02

(a) What is a shipping container and how it helps improve the efficiency of sea transportation (05 Marks)
(b) Briefly explain the advantages and disadvantages of Containerization (07 Marks)
(c) What do you mean by container "Transhipment" (08 Marks)

Question 03

Red and Blue Shipping Line released a bill of lading to Shipper World Largest Tea Exporters. The Consignee on the Bill of Lading read as 'to Order'. The Notify Party read as World Best Tea Importers. The World Best Tea Importers advised the Shipping Line that they have lost the Bill of Lading and presented a Bank Guarantee for 100 percent of the invoice value. The Shipping Line further requested for a Letter of Indemnity which was duly presented and the cargo was released. After one month the duly endorsed

original bill of lading was presented to the Shipping Line. Since the cargo had been released the holder of the Original Bill of Lading sued the Shipping Line for wrong delivery of cargo. Discuss how the Courts would handle this case.

(20 Marks)

Question 04

(a) Received for Shipment Bill of Lading. (05 Marks)
(b) Piolatage (05 Marks)
(c) C.O.D. (Change of Destination) 05 Marks)
(d) Make a short comparison of the Charter Party and the Bill of Lading. (05 Marks)

Question 05

(a) Identify different types of shipping Markets (05 Marks)
(b) Explain why certain cargo to be refrigerated. (04 Marks)
(c) Identify difference classes of IMDG (Dangerous) cargo (05 Marks)
(d) What are the measures you can take when handling Out of Gauge (OOG) cargo (06 Marks)

Question 06

(a) What do you understand by a 'Seaway'Bill of Lading? Discuss it's advantages to the Shipping Line, Shipper and Consignee.

(10 Marks)

(b) What is a 'Switch Bill of Lading' and explain how it operates.

(06 Marks)

(c) Make a short comparison of the 'Clean Bill of Lading' and the 'Claused Bill of Lading'.

(04 Marks)

Colombo International Nautical and Engineering College
CINEC Campus
Faculty of Management & Social Sciences
Department of Logistics & Transport
BSc in International Transportation Management and Logistics
Course CODE: COM550

CINEC MARITIME CAMPUS
Not To Be Taken Away Without Proper Authorization
LIBRARY

Question 07

(a) What are the service characteristics that have an impact in Shipping. (03 Marks)

(b) Write an essay about the comparative advantages that Sri Lanka has for shipping as the best transport mode. Your answer should carry various views from the context of exporters, importers and shipping agents, port operators. (17 Marks)

Question 08

'Letter of Credit plays an important role in the sphere of International Trade' Discuss. (20 Marks)

----------END OF THE QUESTION PAPER----------

Colombo International Nautical and Engineering College

CINEC Campus
Faculty of Management and Social Sciences
Department of Logistics & Transport
BSc in Logistics and Transportation
Course CODE: COM550

62

CINEC MARITIME CAMPUS
Not To Be Taken Away Without Proper Authorization
LIBRARY

Year 2 Semester II

SEMESTER END EXAMINATION

E-Commerce – ECOM0370

- This paper consists of EIGHT questions on FOUR (04) pages.
- Answer FIVE Questions including Question 01.
- Only non-programmable calculators are allowed.
- You may use appropriate graphs, diagrams, equation/s to prove or justify the answers.
- If you have any doubt as to the interpretation of the wording of a question, make your own decision, but clearly state it on the script.
- Write legibly

Date: 2017.09.20 Pass mark: 50% Time: 03 Hours

Question 01: (Compulsory)

(a) Distinguish between Business Model, Business Plan and an E-commerce Business Model (03 Marks)

(b) What are the key elements of a Business Model? Explain two (02) of them in brief (05 Marks)

(c) List down the five (05) Revenue Models used by E-commerce associated organizations/companies. Explain two (02) of them in detail including appropriate examples (06 Marks)

(d) Describe how E-commerce will affect the changes of an industry wide value chain, with examples of E-commerce applications (06 Marks)

Question 02

(a) Briefly explain the term "Internet" (04 Marks)

(b) Explain the three (03) Technology Concepts, that are the basis for understanding the Internet. (06 Marks)

(c) Discuss four (04) Layers of Hourglass/Layered architecture (10 Marks)

Question 03

(a) Write down five (05) methods of E-commerce payment and briefly explain them. (10 Marks)

(b) Using an appropriate diagram, briefly explain the major participants in Online credit card transaction. (06 Marks)

(c) Explain Malicious codes by giving two (02) examples. (04 Marks)

Question 04

(a) Explain the term E-commerce in your own words. (03 Marks)

(b) Briefly describe the advantages of E-commerce over traditional commerce or business (04 Marks)

(c) Explain in detail how business applications in the world have changed according to the ICT technology evolution (07 Marks)

(d) List down the unique features of E-commerce. Explain two (02) of them in brief (06 Marks)

Question 05

(a) Explain why the internet is at the root of many contemporary controversies? (05 Marks)

(b) Identify the unique features of E-commerce Technology, and explain their potential ethical, social and political implications (10 Marks)

(c) Explain the criticisms of IP rights (05 Marks)

Question 06

(a) Briefly explain any four (04) concepts from following.

a) Intranet
b) VPN
c) Encryption
d) Fiber Optic Cable
e) Internet Telephony (08 Marks)

(b) Explain six (06) key dimensions that are applied on an E-commerce security environment. (12 Marks)

CINEC MARITIME CAMPUS
Not To Be Taken Away Without Proper Authorization
LIBRARY

Question 07

Write the HTML code to generate a Web Page in the format given below:

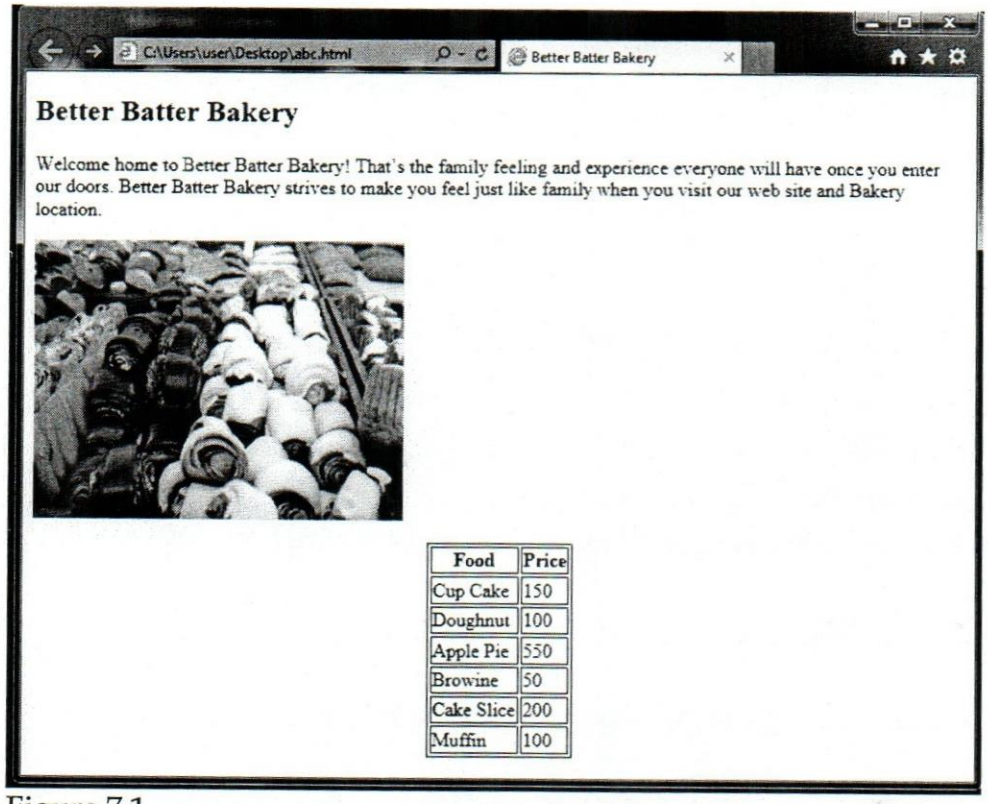

Figure 7.1

Consider the following while writing the HTML code:

(a) Title of the page should be Better Batter Bakery. (02 Marks)
(b) Background color of the page should be "Blue". (02 Marks)
(c) Insert the given paragraph. (04 Marks)
(d) Text style should be "Times New Roman" and text color should be "Green". (04 Marks)
(e) Picture used in the page is the file "Bakery.jpg" located in images subfolder in D drive. (04 Marks)
(f) Create the table as given in the web page. (04 Marks)

Insert table data as follows. Please note that titles Food and Price should be bolded. No alignments required for titles and table data.

Table 7.1

Food	**Price**
Cup Cake	150
Doughnut	100
Apple Pie	550
Brownie	50
Cake slice	200
Muffin	100

Question 08

Write short notes on four (04) of the following

(a) Value proposition
(b) M-commerce
(c) Ethical Dilemmas and steps of analysis
(d) How E-commerce changes the industry structure with Poter's five forces model
(e) P2P network
(f) Web 1.0 and Web 2.0

(5*4 Marks)

----------END OF THE QUESTION PAPER----------

Colombo International Nautical and Engineering College

CINEC Campus
Faculty of Management & Social Sciences
Department of Logistics & Transport
BSc in International Transportation Management and Logistics
Course CODE: COM550

CINEC MARITIME CAMPUS
Not To Be Taken Away Without Proper Authorization
LIBRARY

Year 2 Semester II

SEMESTER END EXAMINATION

Transport Economics – ECON0319

- This paper consists of EIGHT questions on FIVE (05) pages.
- Answer FIVE Questions including Question 01.
- Only non-programmable calculators are allowed.
- You may use appropriate graphs, diagrams, equation/s to prove or justify the answers.
- If you have any doubt as to the interpretation of the wording of a question, make your own decision, but clearly state it on the script.
- Write legibly
- Use MCQ sheet provided with the paper to answer Question 01.

Date: 2017.09.18 Pass mark: 50% Time: 03 Hours

Question 01 (Compulsory)

1. To build a ship, the shipyard will need the facilities to build the ship, those faculties are categorized under,
   A. Land
   B. Labour
   C. Capital
   D. Entrepreneurship

2. The gap between utility and price arise
   A. Utility gap
   B. Price gap
   C. Bargain
   D. Satisfaction.

3. People do not travel for the demand for transport and logistics is depend on demand for other goods and services. Therefore, transport demand is said to be

A. Direct demand
B. Derived demand
C. Unlimited demand
D. Effective demand.

4. Which of following do you consider when calculating the charge per container / charge per day
   A. Monetary cost incurred on container
   B. Time cost / waiting time.
   C. Security/ convenience transport
   D. All of above.

By taking an airplane person X can travel from A to B in one hour. The same trip takes 5 hours by bus. Airfare is $ 90 and the bus fare is $ 30. When person X not travelling, can work and earn $ 30 per hour. Answer question 5,6 and 7

5. The opportunity cost for person A of travelling by bus,
   A. $ 30
   B. $150
   C. $90
   D. $120

6. Opportunity cost for travel by bus,
   A. $120
   B. $180
   C. $30
   D. $90

7. The best decision for person A,
   A. Travel by bus
   B. Travel by plane

CINEC MARITIME CAMPUS
Not To Be Taken Away Without Proper Authorization
LIBRARY

C. Travel by both
D. None of above.

The following are the research outcomes in relation to demand pattern.
Table 1.1 : Elasticity co-efficient of two types of travel with respect to price and income at peak time and off- peak time.

	Price, Peak	Price, Off-Peak	Income
Vehicle demand Type A	-0.16	-0.43	0.70
Vehicle demand Type B	-1.02	-0.36	1.53

Answer Questions 8-10 using above Table1.1

8. Price elasticity of travel demand of type A is,
   A. More elastic in peak time than off- peak time.
   B. Less response in peak time than off peak time.
   C. more response in peak time than off peak time
   D. Both are elastic.

9. If you increase charges for the vehicle
   A. the demand for type B decrease more than Type A in peak time.
   B. the demand for type B increase in both time.
   C. the demand for type A decrease more than Type B in both time
   D. the demand for Type B increase less than type A in peak time.

10. The Type B is a ,
   A. Basic service for the passenger
   B. inferior service for the passenger
   C. luxury service for the passenger
   D. Essential service for the passenger.

(20 Marks)

Question 02

(a) Explain the importance of transport and logistics in the economy. (10 Marks)

(b) Demand for air transportation for the given airline service is depended on some factors. Justify your answer using appropriate examples. (10 Marks)

Question 03

(a) What do you mean by excess supply? illustrate with diagram and explain the reasons for excess supply in the transport field (10 Marks)

(b) What do mean by elasticity of transport supply? Explain that factors which are determine the elasticity of supply with examples. (10 Marks)

Question 04

(a) You are providing following results obtained from a research. Interpret results in table.

variable	With respect to	Short run	Long run
Petrol consumption	Petrol price	-0.3	-1.2
Car traffic	Petrol price	-0.16	-0.3
Petrol consumption	income	1.3	0.8
Car traffic	income	0.7	1.6
Petrol consumption	Diesel price	0.12	0.78

(10 Marks)

(b) Describe the relationship between operator's revenue and elasticity of demand. (10 Marks)

Question 05

(a) Identify the factors of setting a Sea freight rate (05 Marks)

(b) Identify the factors that influence in shipping supply and explain one factor (07 Marks)

(c) What do you understand by "Surcharges" in shipping freight? Identify various Freight surcharges and Explain one briefly. (08 Marks)

Question 06

(a) The government intervenes to control the negative externalities in transport market through their economic policies. Justify your answer with appropriate examples and diagrams. (10 Marks)

(b) Explain the price discriminations in airline industry. (10Marks)

Question 07

(a) Which factors do you consider when developed a forecasting model for air passenger arrivals to Sri Lanka? Why? (10 Marks)

(b) What do you mean by Privet Public Partnership Programme? Explain the advantages and disadvantages of this program. (10 Marks)

Question 08

Write short notes on any FOUR (04) of the followings.

(a) Distinguish between low cost carries and traditional airline
(b) Private cost and public cost
(c) Uses of accounting methods for infrastructure appraisal.
(d) Supply curve of shipping industry
(e) Income elasticity of travel demand

(20 Marks)

----------END OF THE QUESTION PAPER----------

Colombo International Nautical and Engineering College
CINEC Campus
Faculty of Management & Social Sciences
Department of Logistics & Transport
BSc in International Transportation Management and Logistics
Course CODE: COM550

CINEC MARITIME CAMPUS
Not To Be Taken Away Without Proper Authorization
LIBRARY

Year 2 Semester II
REPEAT EXAMINATION
Port Management – PORT0352

- This paper consists of EIGHT questions on TWO (02) pages.
- Answer FIVE Questions including Question 01.
- Only non-programmable calculators are allowed.
- You may use appropriate graphs, diagrams, equation/s to prove or justify the answers.
- If you have any doubt as to the interpretation of the wording of a question, make your own decision, but clearly state it on the script.
- Write legibly.

Date: 2017.02.20 Pass mark: 50% Time: 03 Hours

Question 01 (Compulsory)

What is a port and list out all port facilities? (20 Marks)

Question 02

Describe Sri Lankan Ports on your own words? (20 Marks)

Question 03

What is the role of a Harbour Master and describe how Navigational Services are provided? (20 Marks)

Question 04

Why do you need to measure port performance and explain the different types of performance indicators? (20 Marks)

Question 05

Who are the port users/customers and what are their expectations from a modern port? (20 Marks)

Question 06

Describe port pricing / port tariff items, charging basis, paid by whom & the recipient?

(20 Marks)

Question 07

Describe Colombo Port Expansion Project (CPEP) / Colombo South Harbour and facilities?

(20 Marks)

Question 08

What are the functions of Port Authorities and describe the ports contribution to the economy?

(20 Marks)

----------END OF THE QUESTION PAPER----------

Library

0 4

Colombo International Nautical and Engineering College
CINEC Campus
Faculty of Management and Social Sciences
Department of Logistics & Transport
BSc in International Transportation Management and Logistics
Course CODE: COM550

CINEC MARITIME
Not To Be Taken Away Without Proper Authorization
LIBRARY

Year 2 Semester II
REPEAT EXAMINATION

Inventory and Warehouse Management – IWMG0348

- This paper consists of EIGHT questions on FOUR (04) pages.
- Answer Any FIVE questions including question 01.
- Only non-programmable calculators are allowed.
- You may use appropriate graphs, diagrams, equation/s to prove or justify the answers.
- If you have any doubt as to the interpretation of the wording of a question, make your own decision, but clearly state it on the script.
- Formulae sheet and required tables are attached to the question paper.

Date: 2017.02.19 Pass mark: 50% Time: 03 Hours

Question 01: (Compulsory)

The Dine Corporation is both a producer and a user of Product A. The firm operates 220 days a year and uses the Product A at a steady rate of 50 per day. Product A can be produced at a rate of 200 per day. Annual storage cost is $2 per Product A, and machine setup cost is $70 per run.

(a) Determine the economic run quantity. (05 Marks)
(b) Approximately how many runs per year will there be? (05 Marks)
(c) Compute the maximum inventory level. (05 Marks)
(d) Determine the length of the pure consumption portion of the cycle. (05 Marks)

Question 02

Myriah Fitzgibbon, uses 1,200 of a certain spare part that costs Rs.25 for each order with an annual holding cost of Rs 24.

(a) Calculate the total cost for order sizes of 25, 40, 50, 60, and 100. (08 Marks)
(b) Identify the economic order quantity and consider the implications for making an error in calculating economic order quantity. (12 Marks)

Question 03

(a) Suppose that the manager of a construction supply house determined from historical records that demand for sand during lead time averages 50 tons. In addition, suppose the manager determined that demand during lead time could be described by a normal distribution that has a mean of 50 tons and a standard deviation of 5 tons. Answer these questions, assuming that the manager is willing to accept a stockout risk of no more than 3 percent:

(i) What value of z is appropriate? (02 Marks)
(ii) How much safety stock should be held? (05 Marks)
(iii) What recorder point should be used? (05 Marks)

(b) A restaurant uses an average of 50 jars of a special sauce each week. Weekly usage of sauce has a standard deviation of 3 jars. The manager is willing to accept no more than a 10 percent risk of stockout during lead time, which is two weeks. Assume the distribution of usage is normal.

(i) Determine the value of z. (02 Marks)
(ii) Determine the ROP. (06 Marks)

Question 04

Burger Prince buys top-grade ground beef for Rs.1.00 per pound. A large sign over the entrance guarantees that the meat is fresh daily. Any leftover meat is sold to the local high school cafeteria for 80 cents per pound. Four hamburgers can be prepared from each pound of meat. Burgers sell for 60 cents each. Labor, overhead, meat, buns, and condiments cost 50 cents per burger. Demand is normally distributed with a mean of 400 pounds per day and a standard deviation of 50 pounds per day. What is the optimal order quantity? (20 Marks)

CINEC MARITIME
Not To Be Taken Away Without Proper Authorization
LIBRARY

Question 05

Using the product structure for Alpha below, and the following lead times, quantity on hand, and master production schedule, prepare a net MRP table for Alphas.

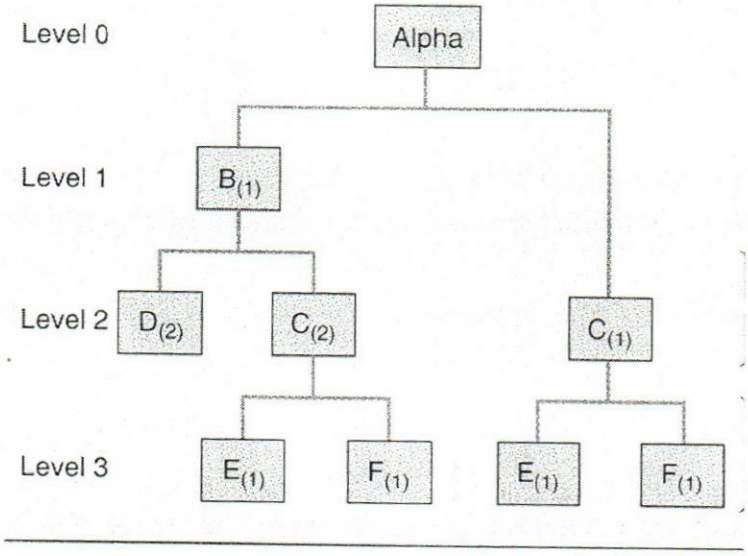

Figure 5.01: Product Structure

Table 5.01: lead time

Item	Lead Time	Quantity on hand
Alpha	1	10
B	2	20
C	3	0
D	1	100
E	1	10
F	1	50

Table 5.02: MPS for Alpha

Period	6	7	8	9	10	11	12	13
GR			50			50		100

(20 Marks)

Question 06

(a) Identify three strategic issues affecting warehouses. (03 Marks)

(b) Identify four main costs related to warehouse management and briefly explain one. (08 Marks)

(c) Briefly explain the role of warehouses. (09 Marks)

Question 07

(a) Identify five cost elements that could be affected by the choice of storage system. (05 Marks)

(b) Briefly explain Palletized Storage System. (06 Marks)

(c) Briefly explain three methods of goods handling in warehousing. (09 Marks)

Question 08

(a) Identify the main types of powered truck used in warehousing (04 Marks)

(b) Briefly explain the importance of conveyors in warehousing. (07 Marks)

(c) Briefly explain three principles of order picking. (09 Marks)

----------END OF THE QUESTION PAPER----------

SAEC MARITIME CAMPUS
Not To Be Taken Away Without
LIBRARY

Summary of inventory formulas

Model	Formula		Symbols
1. Basic EOQ	$Q_0 = \sqrt{\frac{2DS}{H}}$	(12–2)	Q_0 = Economic order quantity D = Annual demand S = Order cost H = Annual carrying cost per unit Q = Order quantity
	$TC = \frac{Q}{2}H + \frac{D}{Q}S$	(12–1)	
	Length of order cycle $= \frac{Q}{D} \times d$	(12–3)	
2. Economic production quantity	$Q_0 = \sqrt{\frac{2DS}{H}}\sqrt{\frac{p}{p-u}}$	(12–5)	Q_0 = Optimal run or order size p = Production or delivery rate u = Usage rate I_{MAX} = Maximum inventory level
	$TC = \frac{I_{max}}{2}H + \frac{D}{Q}S$	(12–4)	
	Cycle time $= \frac{Q}{u}$	(12–6)	
	Run time $= \frac{Q}{p}$	(12–7)	
	$I_{max} = \frac{Q_0}{p}(p-u)$	(12–8)	
3. Quantity discounts	$TC = \frac{Q}{2}H + \frac{D}{Q}S + PD$	(12–9)	P = Unit price
4. Reorder point under:			ROP = Quantity on hand at reorder point
a. Constant demand and lead time	$ROP = d(LT)$	(12–10)	d = Demand rate
b. Variable demand rate	$ROP = \bar{d}\,\overline{LT} + z(\sigma_d)\sqrt{LT}$	(12–13)	LT = Lead time
c. Variable lead time	$ROP = d\,\overline{LT} + z(\sigma_{LT})d$	(12–14)	$\bar{d}$ = Average demand rate
d. Variable lead time and demand	$ROP = \bar{d}\,\overline{LT} + z\sqrt{\overline{LT}\sigma_d^2 + \bar{d}^2\sigma_{LT}^2}$	(12–15)	σ_d = Standard deviation of demand rate z = Standard normal deviation $\overline{LT}$ = Average lead time σ_{LT} = Standard deviation of lead time
5. ROP shortages	$E(n) = E(z)\sigma_{dLT}$	(12–16)	$E(n)$ = Expected number short per cycle
a. Units short per cycle	$E(N) = E(n)\frac{D}{Q}$	(12–17)	$E(z)$ = Standardized number short
b. Units short per year			σ_{dLT} = Standard deviation of lead time demand
c. Annual service level	$SL_{annual} = 1 - \frac{E(z)\sigma_{dLT}}{Q}$	(12–19)	$E(N)$ = Expected number short per year SL_{annual} = Annual service level
6. Fixed interval	$Q = \bar{d}(OI + LT) + z\sigma_d\sqrt{OI + LT} - A$	(12–20)	OI = Time between orders A = Amount on hand at order time
7. Single period	$SL = \frac{C_s}{C_s + C_e}$	(12–21)	SL = Service level C_s = Shortage cost per unit C_e = Excess cost per unit

Normal distribution service levels and unit normal loss function

MARITIME CAM... Not ... LIBRARY

z	Lead Time Service Level	E(z)	z	Lead Time Service Level	E(z)	z	Lead Time Service Level	E(z)	z	Lead Time Service Level	E(z)
−2.40	.0082	2.403	−.80	.2119	.920	0.80	.7881	.120	2.40	.9918	.0030
−2.36	.0091	2.363	−.76	.2236	.889	0.84	.7995	.112	2.44	.9927	.0020
−2.32	.0102	2.323	−.72	.2358	.858	0.88	.8106	.104	2.48	.9934	.0020
−2.28	.0113	2.284	−.68	.2483	.828	0.92	.8212	.097	2.52	.9941	.0020
−2.24	.0125	2.244	−.64	.2611	.798	0.96	.8315	.089	2.56	.9948	.0020
−2.20	.0139	2.205	−.60	.2743	.769	1.00	.8413	.083	2.60	.9953	.0010
−2.16	.0154	2.165	−.56	.2877	.740	1.04	.8508	.077	2.64	.9959	.0010
−2.12	.0170	2.126	−.52	.3015	.712	1.08	.8599	.071	2.68	.9963	.0010
−2.08	.0188	2.087	−.48	.3156	.684	1.12	.8686	.066	2.72	.9967	.0010
−2.04	.0207	2.048	−.44	.3300	.657	1.16	.8770	.061	2.76	.9971	.0010
−2.00	.0228	2.008	−.40	.3446	.630	1.20	.8849	.056	2.80	.9974	.0008
−1.96	.0250	1.969	−.36	.3594	.597	1.24	.8925	.052	2.84	.9977	.0007
−1.92	.0274	1.930	−.32	.3745	.576	1.28	.8997	.048	2.88	.9980	.0006
−1.88	.0301	1.892	−.28	.3897	.555	1.32	.9066	.044	2.92	.9982	.0005
−1.84	.0329	1.853	−.24	.4052	.530	1.36	.9131	.040	2.96	.9985	.0004
−1.80	.0359	1.814	−.20	.4207	.507	1.40	.9192	.037	3.00	.9987	.0004
−1.76	.0392	1.776	−.16	.4364	.484	1.44	.9251	.034	3.04	.9988	.0003
−1.72	.0427	1.737	−.12	.4522	.462	1.48	.9306	.031	3.08	.9990	.0003
−1.68	.0465	1.699	−.08	.4681	.440	1.52	.9357	.028	3.12	.9991	.0002
−1.64	.0505	1.661	−.04	.4840	.419	1.56	.9406	.026	3.16	.9992	.0002
−1.60	.0548	1.623	.00	.5000	.399	1.60	.9452	.023	3.20	.9993	.0002
−1.56	.0594	1.586	.04	.5160	.379	1.64	.9495	.021	3.24	.9994	.0001
−1.52	.0643	1.548	.08	.5319	.360	1.68	.9535	.019	3.28	.9995	.0001
−1.48	.0694	1.511	.12	.5478	.342	1.72	.9573	.017	3.32	.9995	.0001
−1.44	.0749	1.474	.16	.5636	.324	1.76	.9608	.016	3.36	.9996	.0001
−1.40	.0808	1.437	.20	.5793	.307	1.80	.9641	.014	3.40	.9997	.0001
−1.36	.0869	1.400	.24	.5948	.290	1.84	.9671	.013			
−1.32	.0934	1.364	.28	.6103	.275	1.88	.9699	.012			
−1.28	.1003	1.328	.32	.6255	.256	1.92	.9726	.010			
−1.24	.1075	1.292	.36	.6406	.237	1.96	.9750	.009			
−1.20	.1151	1.256	.40	.6554	.230	2.00	.9772	.008			
−1.16	.1230	1.221	.44	.6700	.217	2.04	.9793	.008			
−1.12	.1314	1.186	.48	.6844	.204	2.08	.9812	.007			
−1.08	.1401	1.151	.52	.6985	.192	2.12	.9830	.006			
−1.04	.1492	1.117	.56	.7123	.180	2.16	.9846	.005			
−1.00	.1587	1.083	.60	.7257	.169	2.20	.9861	.005			
−.96	.1685	1.049	.64	.7389	.158	2.24	.9875	.004			
−.92	.1788	1.017	.68	.7517	.148	2.28	.9887	.004			
−.88	.1894	0.984	.72	.7642	.138	2.32	.9898	.003			
−.84	.2005	0.952	.76	.7764	.129	2.36	.9909	.003			

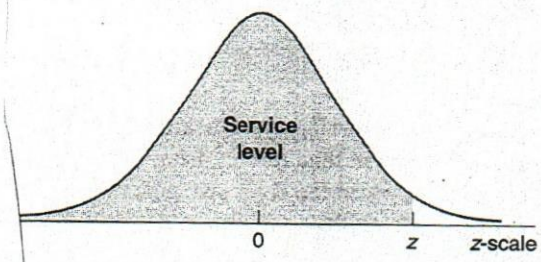

Colombo International Nautical and Engineering College
CINEC Campus
Faculty of Management & Social Sciences
Department of Logistics & Transport
BSc in International Transportation Management and Logistics
Course CODE: COM550

CINEC MARITIME CAMPUS
Not To Be Taken Away Without Proper Authorization
LIBRARY

Year 2 Semester II
REPEAT EXAMINATION
Maritime Law – MLAW0331

- This paper consists of EIGHT questions on FOUR (04) pages.
- Answer FIVE Questions including Question 01.
- Only non-programmable calculators are allowed.
- You may use appropriate graphs, diagrams, equation/s to prove or justify the answers.
- If you have any doubt as to the interpretation of the wording of a question, make your own decision, but clearly state it on the script.
- Write legibly.

Date: 2017.02.18 Pass mark: 50% Time: 03 Hours

Question 01: (Compulsory)

"From its early days at the Lloyd's Coffee House, claimed to be at the origin of the Register of Shipping in 1760, the organization, modus operandi and purpose of ship Register of Shipping in 1760, the organization, modus operandi and purpose of ship registration in the United Kingdom has evolved dramatically, adapting to the economic and social circumstances of the times."
Yvonne Baatz, Maritime Law, Third Edition, Routledge, 2014.

(a) What are the types of the registration of Ships in the world? (04 Marks)
(b) Identify the deference of the above-mentioned registration types. (05 Marks)
(c) Identify one major International Convention related to the Ship registration. (02 Marks)
(d) Identify the legislation (Act) related to the registration of Ships in Sri Lanka (02 Marks)
(e) Write a short essay about the legal impacts of the registration of Ships (07 Marks)

Question 02

"A shipowner's business principally consists of satisfying the demands made by parties to contracts of sale that are located in different countries. The structure of these international sale contracts has had a profound influence on the contracts of carriage made by sellers and buyers to fulfil their commitments towards each other."

(a) Identify three types of maritime Contracts (06 Marks)
(b) Identify the three functions (attributes) of the bill of lading (08 Marks)
(c) Describe the concept of Freight briefly (06 Marks)

Question 03

(a) Identify the tree main forms (categories) of marine insurance (06 Marks)
(b) Describe the role of International Group of Protection and Indemnity (P&I) Clubs in Maritime Insurance Law (06 Marks)
(c) Describe the following terms in Marine Insurance Law
    (i) Cargo Insurance
    (ii) General Average (08 Marks)

Question 04

(a) What is the relevant Act related to the Maritime Mortgages in Sri Lanka? (02 Marks)
(b) What are the details that owners to furnish regarding the mortgage certificate required by the above Act? (04 Marks)
(c) What are the remedies available for breach of mortgage (04 Marks)
(d) Discuss the role of maritime lien in Maritime Law (10 Marks)

Colombo International Nautical and Engineering College
CINEC Campus
Faculty of Management & Social Sciences
Department of Logistics & Transport
BSc in International Transportation Management and Logistics
Course CODE: COM550

Question 05

Assume that the International Maritime Organization (IMO) is conducting an international workshop relating to the protection of marine environment in national levels. You are selected to participate the said workshop representing Sri Lanka. The workshop organizers have requested from the selected participants to prepare a short speech on their national mechanism of marine environment protection. Write your speech emphasizing the international conventions, national laws, institutions, incidents related to the protection of marine environment in Sri Lanka

(20 Marks)

Question 06

(a) Briefly define the following terms
(i) 'Ship'
(ii) NVOCC carriers
(iii) 'Ship under construction'
(iv) SALEFORM (08 Marks)

(b) Discuss the deference between following terms
(i) Common carriers and private carriers (06 Marks)
(ii) Absolute Liability and Vicarious Liability (06 Marks)

Question 07

"Although regulated to a large extent by national legislation, maritime law in almost all jurisdictions is clearly shaped by international influences, in particular international conventions. This is due to the fact that shipping by its very nature involves international relations. .... [M]aritime law is thus a specialized domestic law that cannot avoid international influences. This may in part be the reason why judges and lawyers who deal with maritime law consider themselves as specialists with an international background."

Discuss the above statement addressing the special features and nature of Maritime Law. Your answer should be consisted with legislations (Acts), cases, international conventions related to the Maritime Law.

(20 Marks)

Question 08

Write Five (5) Short notes on following

(a) Action in rem

(b) High Sea

(c) Hamburg Rules

(d) Maritime Arbitration

(e) International Maritime Organisation

(f) Port State Jurisdiction

(g) Hague-Visby Rules

(h) Exclusive Economic Zone

(5*4 Marks)

----------END OF THE QUESTION PAPER----------

Colombo International Nautical and Engineering College

CINEC Campus
Faculty of Management & Social Sciences
Department of Logistics & Transport
BSc in International Transportation Management and Logistics
Course CODE: COM550

0 603

CINEC MARITIME CAMPUS
Library

Year 2 Semester II
REPEAT EXAMINATION
Shipping Management – SPMG0306

- This paper consists of EIGHT questions on THREE (03) pages.
- Answer FIVE Questions including Question 01.
- Only non-programmable calculators are allowed.
- You may use appropriate graphs, diagrams, equation/s to prove or justify the answers.
- If you have any doubt as to the interpretation of the wording of a question, make your own decision, but clearly state it on the script.
- Write legibly.

Date: 2017.02.16 Pass mark: 50% Time: 03 Hours

Question 01: (Compulsory)

(a) What do you understand by a "Seaway" Bill of Lading? (05 Marks)

(b) Discuss its advantages to the Shipping Line, Shipper and Consignee separately. (15 Marks)

Question 02

(a) Explain why Container shipping is important to Sri Lanka (10 Marks)

(b) Who are the key players in the shipping industry? Explain their functions. (10 Marks)

Question 03

ABC Shipping Line issued the full set of Original Bill of Lading to Shipper Worlds' Best Ice Cream Exporters Ltd., The holder of the Bill of Lading in Colombo, Sri Lanka presented the B/L to the agents and requested for the cargo. The B/L read 'consignee as 'To Order'. The B/L was endorsed by the Bank of Ceylon in favour of the holder of the

B/L who was also the Notify Party on the B/L. After one month the shipper sued the Shipping Line for wrong delivery of cargo. Discuss in your opinion how the Courts would handle this case. (20 Marks)

Question 04

(a) Make a short comparison on the Bill of Lading and the Charter Party. (08 Marks)

(b) Write short descriptions on
- (i) Voyage Chartering
- (ii) Time Chartering
- (iii) Bareboat Chartering. (4*3 Marks)

Question 05

(a) What is the background for the implementation of the US Customs 24 Hour Advanced Manifesting Rule? (05 Marks)

(b) What do you understand by C.S.I. (Container Security Initiative)? (05 Marks)

(c) What are the data quality requirements of the Rule? (10 Marks)

Question 06

Write short answers on any of the 4 topics:
- (a) Switch Bill of Lading
- (b) Load Line Certificate
- (c) What is Hazardous Cargo?
- (d) UCP 600
- (e) Import cargo manifest

(5*4 Marks)

CINEC MARITIME CAMPUS LIBRARY
Not To Be Taken Away Without Proper Authorization

0 0013

Question 07

"The Letter of Credit plays a significant role in the sphere of international trade" Discuss. (20 Marks)

Question 08

(a) Make a short comparison of the 'Clean Bill of Lading and Claused Bill of Lading. (05 Marks)

(b) What do you understand by dating the Bill of Lading? (05 Marks)

(c) What do you understand by the 'Shipped Bill of Lading" and "Received for Shipment Bill of Lading"? (10 Marks)

----------END OF THE QUESTION PAPER----------

Colombo International Nautical and Engineering College

CINEC Campus
Faculty of Management & Social Sciences
Department of Logistics & Transport
BSc in International Transportation Management and Logistics
Course CODE: COM550

CINEC MARITIME CA... Not To Be Take... Away... Prop... Author...

Year 2 Semester II
REPEAT EXAMINATION
E-Commerce – ECOM0370

- This paper consists of EIGHT questions on THREE (03) pages.
- Answer FIVE Questions including Question 01.
- Only non-programmable calculators are allowed.
- You may use appropriate graphs, diagrams, equation/s to prove or justify the answers.
- If you have any doubt as to the interpretation of the wording of a question, make your own decision, but clearly state it on the script.
- Write legibly.

Date: 2017.02.15 Pass mark: 50% Time: 03 Hours

Question 01: (Compulsory)

(a) Define "Electronic Commerce" and briefly discuss three main stages available in e-Commerce history. (08 Marks)

(b) Briefly explain how "e-commerce" could help to boost global collaborative business development. (10 Marks)

(c) What is the difference between e-commerce and e-business? (02 Marks)

Question 02

(a) Define the term "Business Model". (02 Marks)

(b) How does the "Business Model" differ from "Business Plan? (03 Marks)

(c) Describe five Revenue Models used by e-commerce firms? (15 Marks)

Question 03

(a) Define the term "Supply Change Management", and explain how does it relate to:

(i) Logistic

(ii) Value chain concept (12 Marks)

(b) How can information system support "Supply Chain"? (08 marks)

Question 04

(a) Define the term "ethical dilemma" in your words (04 Marks)

(b) List, and briefly explain the core principles of privacy addressed/covered by Federal Trade Commission's Fair Information Practices (FTCFIP) principles. (08 Marks)

(c) Describe with appropriate examples, how individual privacy can be assured during ecommerce activities. (08 Marks)

Question 05

(a) Describe five tools and techniques available to provide network security. (10 Marks)

(b) Explain the role of Cryptography in e-commerce transactions? (10 Marks)

Colombo International Nautical and Engineering College
CINEC Campus
Faculty of Management & Social Sciences
Department of Logistics & Transport
BSc in International Transportation Management and Logistics
Course CODE: COM550

Question 06

(a) List down and explain five communication protocols on Internet? (10 Marks)

(b) Explain components of internet network architecture? (07 Marks)

(c) Discuss the difference between intranet and extranet. (03 Marks)

Question 07

(a) What is an electronic payment system and list down four types of electronic payment methods? (04 Marks)

(b) List four limitation of traditional payment system. (04 Marks)

(c) How those limitations overcome by electronic payment systems within the context of e-commerce. Explain your answer with appropriate examples. (12 Marks)

Question 08

Using appropriate examples, explain following key concepts. (5*4 Marks)

(a) Bluetooth

(b) ISP

(c) RSS

(d) Business to Consumer

(e) Wi-Fi

----------*END OF THE QUESTION PAPER*----------

0008

Colombo International Nautical and Engineering College

CINEC Campus
Faculty of Management & Social Sciences
Department of Logistics & Transport
BSc in International Transportation Management and Logistics
Course CODE: COM550

CINEC MARITIME CAMPUS LIBRARY Not To Be Taken Away Without Proper Authorization

Year 2 Semester II
REPEAT EXAMINATION
Transport Economics – ECON0319

- This paper consists of EIGHT questions on TWO (02) pages.
- Answer FIVE Questions including Question 01.
- Only non-programmable calculators are allowed.
- You may use appropriate graphs, diagrams, equation/s to prove or justify the answers.
- If you have any doubt as to the interpretation of the wording of a question, make your own decision, but clearly state it on the script.
- Write legibly.

Date: 2017.02.14 Pass mark: 50% Time: 03 Hours

Question 01 (Compulsory)

"Transport and logistics services play a vital role in an economy" do you agree? Explain.
(20 Marks)

Question 02

Demand for transportation service is depended on some factors. Justify your answer using appropriate examples.
(20 Marks)

Question 03

Explain the meaning of transport supply, determinants of transport supply and elasticity of the transport supply.
(20 Marks)

Question 04

"The elasticity of the travel demand is a crucial requirement in the decision-making process of transport market" Explain the statement appropriate examples and diagrams.
(20 Marks)

Question 05

(a) "Firms which are in a perfectly competitive market can't do price discrimination" do you agree? Explain. (12 Marks)

(b) Distinguish between advantages and disadvantages of Price discriminations (08 Marks)

Question 06

The government intervenes to control and promote those externalities in transport market through their economic policies. Justify your answer with appropriate examples and diagrams. (20 Marks)

Question 07

(a) Classify the cost of automobile with examples. (10 Marks)

(b) Classify the cost of airline services with examples (10 Marks)

Question 08

Write short notes on any four (4) of the followings.

(a) Cost in railway industry.

(b) Supply curve of shipping industry

(c) Law cost carriers in airline

(d) Income elasticity in transport market.

(e) Consumer surplus and price discrimination.

(4*5 Marks)

----------END OF THE QUESTION PAPER----------

Library

Colombo International Nautical and Engineering College

CINEC Campus
Faculty of Management and Social Sciences
Department of Logistics & Transport
BSc in International Transportation Management and Logistics
Course CODE: COM550

00 63

Year 2 Semester II
Semester End EXAMINATION
SHIPPING MANAGEMENT- SPMG0306

- This paper consists of EIGHT questions on THREE (03) pages.
- Answer Any FIVE questions including question 01.
- Only non-programmable calculators are allowed.
- You may use appropriate graphs, diagrams, equation/s to prove or justify the answers.
- If you have any doubt as to the interpretation of the wording of a question, make your own decision, but clearly state it on the script.

Date: 2016.09.12 Pass mark: 50% Time: 03 Hours

Question 01: (Compulsory)

Explain why container shipping is important to Sri Lanka. Identify the key players in the container shipping industry and their roles. Explain how these roles have an impact on exporters and importers

(20 Marks)

Question 02

"Bill of Lading is not a contract, but it is only evidence of a contract". Discuss the statement using the Ardennes 1951 Case.

(20 Marks)

Question 03

(a) What do you understand by ships' certificates? (05 Marks)

(b) Write short descriptions of a) Load Line Certificate,b) International Oil Polution Prevention Certificate & c) Safety Construction Certificate

(15 Marks)

Question 04

"Letter of Credit plays a vital role in the sphere of Internation Trade"

Discuss.

(20 Marks)

Question 05

Ceylon T ea Exporters Ltd., shipped a 'LCL' consignment of 20 boxes of tea to London through ABC Shipping Line. When ABC Shipping Line accepted the cargo 5 boxes were badly damaged and the tea leaves were spilling out. The shipper, Ceylon Tea Exporters Ltd., pleaded the Shipping Line to release a Clean Bill of Lading accepting a letter of indemnity. The Shipping Line Considered the request and released a clean bill of lading. The cargo owner sued the Shipping Line for fraudulent misrepresentation on the Bill of Lading. In your opinion how would the Courts handle this case.

(20 Marks)

Question 06

(a) What do you understand by a "Switch Bill of Lading"?

(07 Marks)

(b) Make a short comparison of the "Shipped on Board" Bill of Lading and "Received for Shipment Bill of Lading" (07 Marks)

(c) Describe how a "Change of Status" request is handled.

(06 Marks)

00 63

Question 07

Discuss the "U.S. Customs 24 Hour Advanced Manifesting Rule" giving special reference to It's background, b) C.S.I (Container Security Initiative c) Data Quality Requirements & d) Issues.

(20 Marks)

Question 08

Write short answers on **ANY FOUR** (04) points listed below:

(a) Maritime Piracy

(b) Short comparison of the Bill of Lading and the Charter Party

(c) Piolatage

(d) Deserters

(e) Bareboat Charter Party.

(20 Marks)

----------*END OF THE QUESTION PAPER*----------

Colombo International Nautical and Engineering College

CINEC Campus
Faculty of Management and Social Sciences
Department of Logistics & Transport
BSc in International Transportation Management and Logistics
Course CODE: COM550

Year 2 Semester II
Semester End EXAMINATION
Maritime Law– MLAW0331

- This paper consists of EIGHT questions on Four (04) pages.
- Answer Any FIVE questions including question 01.
- Only non-programmable calculators are allowed.
- You may use appropriate graphs, diagrams, equation/s to prove or justify the answers.
- If you have any doubt as to the interpretation of the wording of a question, make your own decision, but clearly state it on the script.

Date: 2016.09.07 Pass mark: 50% Time: 03 Hours

- Question 01 (Compulsory)

"Every country engaged in maritime commerce has, in its national legal system, a special branch of law called maritime law, and the courts which administer this special branch of law exercise a special kind of jurisdiction known in English law as admiralty jurisdiction. The rules governing jurisdiction, practice and procedure of these courts constitute admiralty law. Sometimes the term maritime law is used comprehensively to include admiralty law, being its procedural or adjective part, and sometimes the term is used in a narrow sense denoting only the substantive body of principles and usages recognized by commercial nations as just and equitable for determination of questions pertaining to affairs of shipping and navigation and assimilated into their national legal systems. Though the maritime law, including admiralty law, and admiralty courts are parts of the national legal system and pertain to municipal laws of the countries concerned, they have an international aspect because maritime commerce is, by its nature, international."

Samareshwar Mahanty, Maritime Jurisdiction and Admiralty law in India, Universal Law Publishing Co. Pvt. Ltd, 2009.

Do you think that the above-mentioned description of the maritime law is similar to the Sri Lankan context also? Explain your opinion giving examples from International legal instruments (Conventions) case law, Sri Lankan legislations and regulations related to

Maritime Law and Sri Lankan Institutional Framework. Your answer must be focused on the similarities and deviations of the terms Maritime Law, Admiralty Law and Law of the Sea also. (20 Marks)

Question 02

"The Ocean as a subject of the law of the Sea is one single unit and is essentially characterized by the continuity of marine spaces [Zones]."

(a) Sketch out the maritime zones internationally accepted (10 Marks)

(b) Briefly describe each of their powers and limitations (10 Marks)

Question 03

(a) Identify 5 types of bill of lading and briefly describe their nature (05 Marks)

(b) What is the meaning of Sea way bills (05 Marks)

(c) Discuss the deferent between Negotiable and non-negotiable bill of lading (10 Marks)

Question 04

(a) Define the terms 'ship' as 'a vessel by means of the provisions of International Maritime Law Conventions and using the case law.

(08 Marks)

(b) Write a short essay on the Legal impact of Ship mortgages in Ship fiancé.

(12 Marks)

Question 05

"The term "seaworthiness" is a very broad one, as it does not only include the physical state of the vessel but also extends to other aspects/factors. Consequently, it is not easy

to define Seaworthiness in specifically limited terms. It is therefore better to use general terms to give a close indication as to what the concept means. The definition of seaworthiness is the same under the different branches of Maritime Law; however, we are going to consider the definition of seaworthiness in the context of Carriage of Goods by Sea and Marine Insurance as an example."

Ahmad Hussam Kassem, The Legal Aspects of Seaworthiness: Current Law and Development.

(a) Give three examples of unseaworthiness (06 Marks)

(b) What is the nature of the seaworthiness in a maritime contract (02 Marks)

(c) Give some basic instructions to the ship-owners and carriers about the concept of seaworthiness with the factual situation and the final court decision of 3 English cases regarding the seaworthiness (12 Marks)

Question 06

(a) Briefly, discuss the principle nature of the following types of Marine Insurance

(i) Insurance related to ships (03 Marks)
(ii) Insurance of goods under transport (03 Marks)

(b) Identify 2 Institutions regarding the Marine Insurance and briefly, discuss their role in Marine Insurance (05 Marks)

(c) Discuss the following topics under Maritime Insurance Law

(i) No-limitation coverage (03 Marks)
(ii) Omnibus rule (03 Marks)
(iii) Third party risks (03 Marks)

Question 07

Assume that you are the research assistant attached to Ministry of Shipping and Marine Affairs Republic of Tolangatu (Hypothetical County). Mr. Udumba Generalis who is the minister of Shipping and Marine Affairs requested you to prepare a short report on Liability of Ships in collision cases and the limitations. Your report must be considered about the history of the collision liability clauses, Recoverable and unrecoverable damages, Limitation of liability and Maritime Arbitration. Assume that the legal system, case law, common law and Law of the negligence of Republic of Tolangatu are totally similar to Sri Lankan legal system, case law and the others. Prepare the report on behalf of Mr. Udumba Generalis.

(20 Marks)

Question 08

Write short notes from **Five** (05) **of** the following topics (20 Marks)

(a) Action in *rem*
(b) Hague/Visby Rules
(c) Absolute liability
(d) Conflicts of Laws
(e) Choice of laws
(f) Charterparties
(g) Maritime Lien
(h) Action in *personam*

----------END OF THE QUESTION PAPER----------

Colombo International Nautical and Engineering College

CINEC Campus
Faculty of Management and Social Sciences
Department of Logistics & Transport
BSc in International Transportation Management and Logistics
Course CODE: COM550

Year 2 Semester II
Semester End EXAMINATION
Air cargo and Passenger Transport – IWMG0348

- This paper consists of EIGHT questions on Three (03) pages.
- Answer Any FIVE questions including question 01.
- Only non-programmable calculators are allowed.
- You may use appropriate graphs, diagrams, equation/s to prove or justify the answers.
- If you have any doubt as to the interpretation of the wording of a question, make your own decision, but clearly state it on the script.

Date: 2016.09.05 Pass mark: 50% Time: 03 Hours

Question 01: (Compulsory)

a) List down the two functions of the State in relation to aviation industry (05 marks)

b) Identify the four forces of an aircraft and three axis of rotation (07 marks)

c) Identify what is the main difference between a merger and an airline alliance. (03 marks)

d) Briefly explain three types of air freight rates (05 marks)

Question 02

a) Explain five factors that affect air freight rates in detail (10 marks)

b) Identify 5 different flight controls and explain in brief (10 marks)

Question 3

a) There are 9 freedom rights that air in use in the air transport industry. Explain the 2nd, 3rd, 5th, 7th and 8th freedom rights with relevant examples (10 marks)

b) There are different types of cargo carriers. List down how many types of cargo carriers are there and explain two of them in detail. (10 marks)

Question 4

a) Explain what is Chicago Convention and its implications. (05 marks)
b) Airline industry is an oligopolistic market. Explain characteristics of an oligopolistic market in detail (10 marks)
c) Define what is an airway bill (05 marks)

Question 5

a) List out 5 pioneers in the aviation industry with their contribution. (05 marks)
b) Identify five (05) reasons why the commodities are shipped by air with relevant examples, if any (15 marks)

Question 6

a) What are categorized as dangerous goods in the context of airline industry? (05 marks)
b) Explain the weight buildup of an aircraft in detail with appropriate graphical illustrations (10 marks)
c) Define what is a safety culture (05 marks)

Question 7

a) Explain the change in Civil Aviation Management occurred in State Functions being transferred into public corporations or limited liability company/ companies with a use of a diagram (10 marks)

c) Explain the difference between a full service carrier, low cost carrier and a value based carrier with relevant examples from the airline industry. (10 marks)

Question 8

SHELL model is a tool used in the air transport industry to understand the human contribution to safety and to support the human operational performance necessary to achieve system's production goals. Explain the elements of SHELL model in the context of an airline. (20 marks)

----------END OF THE QUESTION PAPER----------

Library

Colombo International Nautical and Engineering College

CINEC Campus
Faculty of Management and Social Sciences
Department of Logistics & Transport
BSc in International Transportation Management and Logistics
Course CODE: COM550

82

Year 2 Semester II
Semester End EXAMINATION
E-Commerce– ECOM0370

- This paper consists of EIGHT questions on Three (03) pages.
- Answer Any FIVE questions including question 01.
- Only non-programmable calculators are allowed.
- You may use appropriate graphs, diagrams, equation/s to prove or justify the answers.
- If you have any doubt as to the interpretation of the wording of a question, make your own decision, but clearly state it on the script.

Date: 2016.08.31 Pass mark: 50% Time: 03 Hours

Question 01 (Compulsory)

(a) List and briefly explain any six (06) unique features of e- Commerce.

(12 Marks)

(b) Explain with relevant examples how the listed (in part (a)) unique features of e-Commerce can assist to improve main business processes of Logistics and Transportation.

(08 Marks)

Question 02

(a) List the common e-Commerce business models. (05 Marks)

(b) Explain in detail the use of different B2C e-Commerce business models and their impact on gaining competitive advantage for a small scale start-up business organization.

(15 Marks)

Question 03

(a) The term ""the Internet" commonly refers to the technology that connects billions of devices worldwide through the TCP/IP protocol suite.

(a) Briefly discuss four services offered by "the Internet" (16 Marks)

(b) What does *DNS* stand for? Discuss how it works? (04 marks)

Question 04

(a) List and briefly explain the most important common management challenges when developing an e-Commerce site for an organization.

(08 Marks)

(b) Propose suitable mechanism/s to overcome the challenges identified above in part (a).

(12 Marks)

Question 05

(a) Discuss briefly, the importance of electronic payment methods and the relevant legislation for the sustainability of current e-Commerce era.

(08 Marks)

(b) Explain briefly with the use of a suitable diagram/ illustration how an on-line credit transaction works.

(12 Marks)

Question 06

(a) Discuss with justification, why it is important to address the rising concerns on ethical, social, political and legal issues of e-Commerce.

(08 Marks)

(b) Consider the below snippet.

"You are a programming expert. One of your very close friends requests you to help her "hacking" in to one of her friend's social network service user account."

What would be your response to your friend as a Year 2 ITML/ UGC student of CINEC Campus? Justify your answer. (12 Marks)

Question 07

(a) Briefly discuss about "*Privacy and security of E commerce environment and how it creates an* impact *on economy of an organization.*" (10 Marks)

(b) Explain, with two main encryption techniques how encryption provides a solution for those security issues? (10 Marks)

Question 08

Write short notes on below key words.

(a) Client-Server Computing

(b) Intranet

(c) SET (Secure Electronic Transaction)

(d) Outsourcing (20 Marks)

----------*END OF THE QUESTION PAPER*----------

Colombo International Nautical and Engineering College

CINEC Campus
Faculty of Management and Social Sciences
Department of Logistics & Transport
BSc in International Transportation Management and Logistics
Course CODE: COM550

Year 2 Semester II
Semester End EXAMINATION
Transport Economics– ECON0319

- This paper consists of EIGHT questions on Three (03) pages.
- Answer Any FIVE questions including question 01.
- Only non-programmable calculators are allowed.
- You may use appropriate graphs, diagrams, equation/s to prove or justify the answers.
- If you have any doubt as to the interpretation of the wording of a question, make your own decision, but clearly state it on the script.

Date: 2016.08.29 Pass mark: 50% Time: 03 Hours

Question 01 (Compulsory)

(a) Explain the importance of transport and logistics in the economy. (10 Marks)
(b) Explain the factors of production in relations to transport and logistics field (10 Marks)

Question 02

Demand for air transportation for the given airline service is depended on some factors. Justify your answer using appropriate examples. (20 Marks)

Question 03

(a) Explain concept of Law of Supply related to logistics and transport field. (05 Marks)
(b) Explain the reasons for excess supply in the transport field (06 Marks)
(c) Explain the factors which are determine the elasticity of supply with examples. (09 Marks)

Question 04

(a) You are providing following results obtained from a research. Interpret results in table.

variable	With respect to	Short run	Long run
Petrol consumption	Petrol price	-0.3	-0.8
Car traffic	Petrol price	-0.16	-0.3
Petrol consumption	income	0.5	1.2
Car traffic	income	0.7	1.6
Petrol consumption	Diesel price	0.12	0.78

(15 Marks)

(b) The transport operator's revenue will depend on relative travel demand elasticity of the transport mode. Explain with examples (05 Marks)

Question 05

(a) What do you understand about pricing policy in transport market? (05 Marks)

(b) "Firms which are in a perfectly competitive market can't do price discrimination" do you agree? Explain. (07 Marks)

(c) Distinguish between advantages and disadvantages of Price discriminations (08 Marks)

Question 06

The government intervenes to control and promote those externalities in transport market through their economic policies. Justify your answer with appropriate examples and diagrams. (20 Marks)

Question 07

(a) Discuss the cost saving process in road transportation (06 Marks)

(b) Classify the cost of rail transportation (06 marks)

(c) Distinguish between allocated cost and apportioned cost in airline industry (08 Marks)

Question 08

Write short notes on any four (4) of the followings.

(a) Private cost and public cost
(b) Product differentiation in railway
(c) Supply curve of shipping industry
(d) Law cost carriers in airline
(e) Income elasticity of travel demand

(20 Marks)

----------*END OF THE QUESTION PAPER*----------

Colombo International Nautical and Engineering College
CINEC Campus
Faculty of Humanities and Social Sciences
Department of Logistics & Transport
BSc in International Transportation Management and Logistics
Course CODE: COM550

Library
000048

Year 2 Semester II
SEMESTER END EXAMINATION
SHIPPING MANAGEMENT- SPMGM0306

- This paper consists of EIGHT questions on Two (02) pages.
- Answer FIVE Questions including Question 1.
- Only non-programmable calculators are allowed.
- You may use appropriate graphs, diagrams, equation/s to prove or justify the answers.
- If you have any doubt as to the interpretation of the wording of a question, make your own decision, but clearly state it on the script.

Date: 2015.09.03 Pass mark: 50% Time: 03 Hours

Question 01: (Compulsory)

Ceyon Tea Co Ltd., handed over a shipment of 25 ctns of tea as a 'LCL' shipment to ZQJ Shipping Line. 7 Ctns were badly damaged at the time of acceptance by the shipping line. However, the shipper insisted the shipping line to issue a Clean Bill of Lading and the Line did so after accepting a letter of indemnity. The cargo owner held the line responsible for issuing a Clean Bill of Lading. Discuss in your opinion how the Courts would handle this case. (20 Marks)

Question 02:

Identify the key players in the shipping industry (06 Marks)
Identify the key roles of shipping agent (06 Marks)
Explain the role played by exporters in performing a shipment. (08 Marks)

Question 03:

Discuss the important role played by the Letter of Credit in the sphere of International Trade. (10 Marks)
Sri Lanka Shipping Industry still has a long way to go in the improvement of E Commerce. Do you agree with this statement or not. Discuss. (10 Marks)

Question 04:

List down the Basic Principles of Hazardous cargo. Give a short description of each Principle. (20 Marks)

Question 05:

Importers of Toys Ltd., requested the Shipping Line to issue a duplicate set of bs/l and release the cargo. The reason given was that the 1st set of OBL was lost. The shipping line received the approval from the shipper and then collected a letter of indemnity from Importers of Toys Ltd., and issued a duplicate set of the b/l and released the cargo. After 3 months the holder of the 1st set of Original B/L presented the duly endorsed Bill of Lading and requested for cargo. Discuss how this would be handled by the courts. (20 Marks)

Question 06

Discuss the background and the implementation of the US Customs 24 hour Advanced Manifesting Rule. (20 Marks)

Question 07

Write short answers on the following: (20 Marks)

(a) Load line
(b) Handling a Change of Destination
(c) UCP 600
(d) ISPS Code

Question 08

(a) Make a short comparison of the Bill of Lading and the Charterparty (10 Marks)

(b) Make a short comparison of the Shipping Bill of Lading and the Received for Shipment Bill of Lading. (10 Marks)

----------END OF THE QUESTION PAPER----------

Library

Colombo International Nautical and Engineering College

CINEC Campus
Faculty of Humanities and Social Sciences
Department of Logistics & Transport
BSc in International Transportation Management and Logistics
Course CODE: COM550

000004

Year 2 Semester II
REPEAT EXAMINATION
Inventory and Warehouse Management- IWMG0348

- This paper consists of EIGHT questions on Three (03) pages.
- Answer FIVE Questions including Question 1.
- Only non-programmable calculators are allowed.
- You may use appropriate graphs, diagrams, equation/s to prove or justify the answers.
- If you have any doubt as to the interpretation of the wording of a question, make your own decision, but clearly state it on the script.

Date: 2016.03.11 Pass mark: 50% Time: 03 Hours

Question 01: (Compulsory)

Myriah Fitzgibbon, uses 1,200 of a certain spare part that costs Rs.25 for each order with an annual holding cost of Rs 24.

(a) Calculate the total cost for order sizes of 25, 40, 50, 60, and 100. (08 Marks)

(b) Identify the economic order quantity and consider the implications for making an error in calculating economic order quantity. (12 Marks)

Question 02

McLeavey Manufacturing has a demand for 1,000 pumps each year. The cost of a pump is Rs 50. It costs McLeavey Rs 40 to place an order, and carrying cost is 25% of unit cost. If pumps are ordered in quantities of 200, McLeavey can get a 3% discount. Should McLeavey order 200 pumps at a time and take the 3% discount?

(20 Marks)

Question 03

Famous Albert prides himself on being the cookie kings of the west small, freshly baked cookies are the specialty of his shop. Famous Albert has asked for help to determine the number of cookies he should make each day. From an analysis of past demand he estimates demand for cookies as

Demand (dozen)	Probability of Demand
1, 800	0.05
2, 000	0.10
2, 200	0.20
2, 400	0.30
2, 600	0.20
2, 800	0.10
3, 000	0.05

Each dozen sells for Rs. 69 and costs Rs. 49, which includes handling and transportation. Cookies that are not sold at the end of the day are reduced to Rs. 0.29 and sold the following day as day old merchandize. What is the optimal number of cookies to make? (20 Marks)

Question 04

Burger Prince buys top-grade ground beef for Rs.1.00 per pound. A large sign over the entrance guarantees that the meat is fresh daily. Any leftover meat is sold to the local high school cafeteria for 80 cents per pound. Four hamburgers can be prepared from each pound of meat. Burgers sell for 60 cents each. Labor, overhead, meat, buns, and condiments cost 50 cents per burger. Demand is normally distributed with a mean of 400 pounds per day and a standard deviation of 50 pounds per day. What is the order quantity is optimal? (20 Marks)

Question 05

Assume that you are a manager. You have received an order of 40 units of machines, which is to be delivered at the start of week 7 of your schedule. You already have 10 Machines in the inventory. A Machine consists of three components: B, C & G. One B, one G and three Cs are used to make this product. Company needs two weeks to assemble Machines. Using the following information;

(a) Develop a product structure tree for the machine (03 Marks)

(b) Determine how many units of components G should be ordered and the timing of those orders, given that both components G & C must be ordered in multiples of 80 units. Assume that components are used only for this particular machine.

000004

Item	LT(Weeks)	On Hand	Components
B	1	5	E,F
C	1	20	G(2), H
E	2	4	
F	3	8	
G	2	15	
H	1	10	

(17 Marks)

Question 06

(a) Identify the benefits of warehouses. (04 Marks)
(b) Briefly explain three operating principles of warehousing. (06 Marks)
(c) Briefly explain the factors should be considered when design a warehouse. (10 Marks)

Question 07

(a) Define the term "warehouse" (02 Marks)
(b) Planning a warehouse is a very critical task. Briefly explain. (08 Marks)
(c) Briefly explain five factors which are involved in formulating a location strategy of a warehouse. (10 Marks)

Question 08

(a) Choosing a best size of a ware house is involving with five important factors. What are those? (05 Marks)
(b) Briefly explain four factors which are involved in warehouse planning. (06 Marks)
(c) Explains the main productivity metrics of warehousing. (09 Marks)

----------*END OF THE QUESTION PAPER*----------

Normal distribution service levels and unit normal loss function

z	Lead Time Service Level	E(z)	z	Lead Time Service Level	E(z)	z	Lead Time Service Level	E(z)	z	Lead Time Service Level	E(z)
−2.40	.0082	2.403	−.80	.2119	.920	0.80	.7881	.120	2.40	.9918	.0030
−2.36	.0091	2.363	−.76	.2236	.889	0.84	.7995	.112	2.44	.9927	.0020
−2.32	.0102	2.323	−.72	.2358	.858	0.88	.8106	.104	2.48	.9934	.0020
−2.28	.0113	2.284	−.68	.2483	.828	0.92	.8212	.097	2.52	.9941	.0020
−2.24	.0125	2.244	−.64	.2611	.798	0.96	.8315	.089	2.56	.9948	.0020
−2.20	.0139	2.205	−.60	.2743	.769	1.00	.8413	.083	2.60	.9953	.0010
−2.16	.0154	2.165	−.56	.2877	.740	1.04	.8508	.077	2.64	.9959	.0010
−2.12	.0170	2.126	−.52	.3015	.712	1.08	.8599	.071	2.68	.9963	.0010
−2.08	.0188	2.087	−.48	.3156	.684	1.12	.8686	.066	2.72	.9967	.0010
−2.04	.0207	2.048	−.44	.3300	.657	1.16	.8770	.061	2.76	.9971	.0010
−2.00	.0228	2.008	−.40	.3446	.630	1.20	.8849	.056	2.80	.9974	.0008
−1.96	.0250	1.969	−.36	.3594	.597	1.24	.8925	.052	2.84	.9977	.0007
−1.92	.0274	1.930	−.32	.3745	.576	1.28	.8997	.048	2.88	.9980	.0006
−1.88	.0301	1.892	−.28	.3897	.555	1.32	.9066	.044	2.92	.9982	.0005
−1.84	.0329	1.853	−.24	.4052	.530	1.36	.9131	.040	2.96	.9985	.0004
−1.80	.0359	1.814	−.20	.4207	.507	1.40	.9192	.037	3.00	.9987	.0004
−1.76	.0392	1.776	−.16	.4364	.484	1.44	.9251	.034	3.04	.9988	.0003
−1.72	.0427	1.737	−.12	.4522	.462	1.48	.9306	.031	3.08	.9990	.0003
−1.68	.0465	1.699	−.08	.4681	.440	1.52	.9357	.028	3.12	.9991	.0002
−1.64	.0505	1.661	−.04	.4840	.419	1.56	.9406	.026	3.16	.9992	.0002
−1.60	.0548	1.623	.00	.5000	.399	1.60	.9452	.023	3.20	.9993	.0002
−1.56	.0594	1.586	.04	.5160	.379	1.64	.9495	.021	3.24	.9994	.0001
−1.52	.0643	1.548	.08	.5319	.360	1.68	.9535	.019	3.28	.9995	.0001
−1.48	.0694	1.511	.12	.5478	.342	1.72	.9573	.017	3.32	.9995	.0001
−1.44	.0749	1.474	.16	.5636	.324	1.76	.9608	.016	3.36	.9996	.0001
−1.40	.0808	1.437	.20	.5793	.307	1.80	.9641	.014	3.40	.9997	.0001
−1.36	.0869	1.400	.24	.5948	.290	1.84	.9671	.013			
−1.32	.0934	1.364	.28	.6103	.275	1.88	.9699	.012			
−1.28	.1003	1.328	.32	.6255	.256	1.92	.9726	.010			
−1.24	.1075	1.292	.36	.6406	.237	1.96	.9750	.009			
−1.20	.1151	1.256	.40	.6554	.230	2.00	.9772	.008			
−1.16	.1230	1.221	.44	.6700	.217	2.04	.9793	.008			
−1.12	.1314	1.186	.48	.6844	.204	2.08	.9812	.007			
−1.08	.1401	1.151	.52	.6985	.192	2.12	.9830	.006			
−1.04	.1492	1.117	.56	.7123	.180	2.16	.9846	.005			
−1.00	.1587	1.083	.60	.7257	.169	2.20	.9861	.005			
−.96	.1685	1.049	.64	.7389	.158	2.24	.9875	.004			
−.92	.1788	1.017	.68	.7517	.148	2.28	.9887	.004			
−.88	.1894	0.984	.72	.7642	.138	2.32	.9898	.003			
−.84	.2005	0.952	.76	.7764	.129	2.36	.9909	.003			

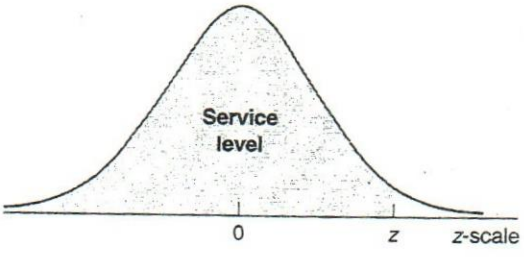

Summary of inventory formulas

Model	Formula		Symbols
1. Basic EOQ	$Q_0 = \sqrt{\frac{2DS}{H}}$	(12–2)	Q_o = Economic order qu
	$TC = \frac{Q}{2}H + \frac{D}{Q}S$	(12–1)	D = Annual demand
			S = Order cost
			H = Annual carrying co
	Length of order cycle $= \frac{Q}{D}$	(12–3)	Q = Order quantity
2. Economic production quantity	$Q_o = \sqrt{\frac{2DS}{H}}\sqrt{\frac{p}{p-u}}$	(12–5)	Q_o = Optimal run or orde
	$TC = \frac{I_{max}}{2}H + \frac{D}{Q}S$	(12–4)	p = Production or deliv
			u = Usage rate
			I_{MAX} = Maximum inventor
	Cycle time $= \frac{Q}{u}$	(12–6)	
	Run time $= \frac{Q}{p}$	(12–7)	
	$I_{max} = \frac{Q_0}{p}(p-u)$	(12–8)	
3. Quantity discounts	$TC = \frac{Q}{2}H + \frac{D}{Q}S + PD$	(12–9)	P = Unit price
4. Reorder point under:			ROP = Quantity on hand at
a. Constant demand and lead time	ROP $= d(LT)$	(12–10)	d = Demand rate
b. Variable demand rate	ROP $= \bar{d}\,\overline{LT} + z(\sigma_d)\sqrt{LT}$	(12–13)	LT = Lead time
c. Variable lead time	ROP $= d\overline{LT} + z(\sigma_{LT})d$	(12–14)	$\bar{d}$ = Average demand ra
d. Variable lead time and demand	ROP $= \bar{d}\,\overline{LT} + z\sqrt{\overline{LT}\sigma_d^2 + \bar{d}^2\sigma_{LT}^2}$	(12–15)	σ_d = Standard deviation o
			z = Standard normal de
			$\overline{LT}$ = Average lead time
			σ_{LT} = Standard deviation
5. ROP shortages	$E(n) = E(z)\sigma_{dLT}$	(12–16)	$E(n)$ = Expected number sh
a. Units short per cycle	$E(N) = E(n)\frac{D}{Q}$	(12–17)	$E(z)$ = Standardized numb
b. Units short per year			σ_{dLT} = Standard deviation
c. Annual service level			demand
	$SL_{annual} = 1 - \frac{E(z)\sigma_{dLT}}{Q}$	(12–19)	$E(N)$ = Expected number sh
			SL_{annual} = Annual service leve
6. Fixed interval	$Q = \bar{d}(OI + LT) + z\sigma_d\sqrt{OI + LT} - A$	(12–20)	OI = Time between order
			A = Amount on hand at
7. Single period	$SL = \frac{C_s}{C_s + C_e}$	(12–21)	SL = Service level
			C_s = Shortage cost per u
			C_e = Excess cost per unit

Library

Colombo International Nautical and Engineering College

CINEC Campus
Faculty of Management and Social Sciences
Department of Logistics & Transport
BSc in International Transportation Management and Logistics
Course CODE: COM550

Year 2 Semester II
REPEAT EXAMINATION

000007

Maritime Law- MLAW0331

- This paper consists of EIGHT questions on Three (03) pages.
- Answer FOUR Questions including Question 1.
- Only non-programmable calculators are allowed.
- You may use appropriate graphs, diagrams, equation/s to prove or justify the answers.
- If you have any doubt as to the interpretation of the wording of a question, make your own decision, but clearly state it on the script.

Date: 2016.03.09 Pass mark: 50% Time: 03 Hours

Answer only FOUR Questions including Question 1

Question 01 (Compulsory)

'The international carriage of goods by sea has played and continues to play an extremely important role in international commercial law. Hence a study of the different types of sea carriage contracts and the legal liabilities of the parties to a contract of carriage is essential to provide a rounded picture of international commerce. The module considers the legal relationship between the parties to a contract of carriage within the framework of the common law, mercantile custom, and international conventions." (quoted)

Explain the above in the context of;

(a) Bills of Lading
(b) Charter Parties (25 Marks)

Question 02

"The carriage of goods of less than full cargo capacity is accomplished generally by a contract of affreightment, thus calling into play the role of bills of lading. Some confusion arises because a bill of lading commonly serves three purposes:

1. An acknowledgment by the carrier that it has received the goods.
2. A contract of carriage.
3. A negotiable instrument"

Explain (25 Marks)

Question 03

Explain ship ownership in relation with
(a) General nature of ownership
(b) Shares in ships
(c) Joint/co- ownership
(d) One ship company
(e) Disponent owner (25 Marks)

Question 04

Explain the provisions of Ship SALEFORM 2012

(25 Marks)

Question 05

In Sri Lanka, the Admiralty Jurisdiction Act No. 40 of 1983 grants commercial High Court of Colombo, a certain Jurisdiction to hear and determine some claims. Explain them.

(25 Marks)

Question 06

Seafarers are expected to avoid maritime casualties at sea in order to maintain safety of navigation for all ships using the navigable waters.
In general, 'marine casualty or accident' is anything involving any commercial vessel that occur within the navigable waters of a State that result in significant harm to the environment or material damage affecting the seaworthiness or efficiency of a vessel.

Explain the above with preference to collision.

(25 Marks)

000007

Question 07

General Average is defined as, "A principle of maritime law where in the event of emergency, if cargo is jettisoned or expenses incurred, the loss is shared proportionately by all parties with a financial interest in the voyage"

Explain

(25 Marks)

Question 08

The right to limit liability is a cardinal principle that correspond to the important of protecting maritime industry.

Explain the above statement with reference to LLMC Conventions (25 Marks)

----------END OF THE QUESTION PAPER----------

Library

Colombo International Nautical and Engineering College

CINEC Campus
Faculty of Humanities and Social Sciences
Department of Logistics & Transport
BSc in International Transportation Management and Logistics
Course CODE: COM550

Year 2 Semester II
REPEAT EXAMINATION
Maritime Law - MLAW0331

- This paper consists of EIGHT questions on Three (03) pages.
- Answer FIVE Questions including Question 1.
- Only non-programmable calculators are allowed.
- You may use appropriate graphs, diagrams, equation/s to prove or justify the answers.
- If you have any doubt as to the interpretation of the wording of a question, make your own decision, but clearly state it on the script.

Date: 2015.12.18 Pass mark: 50% Time: 03 Hours

Question 01 (Compulsory)

'The international carriage of goods by sea has played and continues to play an extremely important role in international commercial law. Hence a study of the different types of sea carriage contracts and the legal liabilities of the parties to a contract of carriage is essential to provide a rounded picture of international commerce. The module considers the legal relationship between the parties to a contract of carriage within the framework of the common law, mercantile custom, and international conventions." (quoted)
Explain the above in the context of;

(a) Bills of Lading
(b) Charter Parties (25 Marks)

Question 02

"The carriage of goods of less than full cargo capacity is accomplished generally by a contract of affreightment, thus calling into play the role of bills of lading. Some confusion arises because a bill of lading commonly serves three purposes:
1. An acknowledgment by the carrier that it has received the goods.
2. A contract of carriage.
3. A negotiable instrument"

Explain (25 Marks)

Question 03

Explain ship ownership in relation with

(a) General nature of ownership
(b) Shares in ships
(c) Joint/co- ownership
(d) One ship company
(e) Disponent owner

(25 Marks)

Question 04

Explain the provisions of Ship SALEFORM 2012

(25 Marks)

Question 05

In Sri Lanka, the Admiralty Jurisdiction Act No. 40 of 1983 grants commercial High Court of Colombo, a certain Jurisdiction to hear and determine some claims. Explain them.

(25 Marks)

Question 06

Seafarers are expected to avoid maritime casualties at sea in order to maintain safety of navigation for all ships using the navigable waters.
In general, 'marine casualty or accident' is anything involving any commercial vessel that occur within the navigable waters of a State that result in significant harm to the environment or material damage affecting the seaworthiness or efficiency of a vessel.
Explain the above with preference to collision.

(25 Marks)

Question 07

General Average is defined as, "A principle of maritime law where in the event of emergency, if cargo is jettisoned or expenses incurred, the loss is shared proportionately by all parties with a financial interest in the voyage"

Explain

(25 Marks)

Colombo International Nautical and Engineering College
CINEC Campus
Faculty of Humanities and Social Sciences
Department of Logistics & Transport
BSc in International Transportation Management and Logistics
Course CODE: COM550

Question 08

The right to limit liability is a cardinal principle that corresponds to the important of protecting maritime industry.

Explain the above statement with reference to LLMC Conventions (25 Marks)

----------END OF THE QUESTION PAPER----------

Colombo International Nautical and Engineering College
CINEC Campus
Faculty of Humanities and Social Sciences
Department of Logistics & Transport
BSc in International Transportation Management and Logistics
Course CODE: COM550

40

Year 2 Semester II
REPEAT EXAMINATION
SHIPPING MANAGEMENT- SPMG0306

- This paper consists of EIGHT questions on Two (02) pages.
- Answer FIVE Questions including Question 1.
- Only non-programmable calculators are allowed.
- You may use appropriate graphs, diagrams, equation/s to prove or justify the answers.
- If you have any doubt as to the interpretation of the wording of a question, make your own decision, but clearly state it on the script.

Date: 2015.12.19 Pass mark: 50% Time: 03 Hours

Question 01: (Compulsory)

What are the basic principles of Dangerous cargo and give a short description of each of them (20 Marks)

Question 02

(a) What is a Seaway Bill of Lading? (05 Marks)
(b) Discuss the advantages of the Seaway B/L to the Line, Shipper & consignee separately. (15 Marks)

Question 03

When transporting refrigerated cargo describe the importance role played by the Refrigeration Machinery, Data loggers, the Control System and the Probes in the reefer container (20 Marks)

Question 04

(a) "The letter of Credit plays an important role in the sphere of international trade". Discuss why you agree with this statement (10 Marks)
(b) Sri Lanka Shipping Industry still has a long way to go in the improvement of E-commerce. Do you agree with this statement or not. discuss (10 Marks)

Question 05

Identify the key players in the shipping industry. Explain the role of shipping agents. (20 Marks)

Question 06

(a) Make a short comparison of the Bill of Lading and the Charter Party. (10 Marks)

(b) What do you understand by 'Switch Bill of Lading'? (10 Marks)

Question 07

Discuss the background and the implementation of the US Customs 24 hour Advanced manifesting Rule. (20 Marks)

Question 08

Write short notes on the following: (20 Marks)

(a) Load Line Certificate
(b) ISPS Code
(c) International Oil Polution Certificate
(d) Pilotage

----------*END OF THE QUESTION PAPER*----------

library

Colombo International Nautical and Engineering College

CINEC Campus
Faculty of Humanities and Social Sciences
Department of Logistics & Transport
BSc in International Transportation Management and Logistics
Course CODE: COM550

58

Year 2 Semester II
REPEAT EXAMINATION
E-COMMERCE- ECOMG0370

- This paper consists of EIGHT questions on Two (02) pages.
- Answer FIVE Questions including Question 1.
- Only non-programmable calculators are allowed.
- You may use appropriate graphs, diagrams, equation/s to prove or justify the answers.
- If you have any doubt as to the interpretation of the wording of a question, make your own decision, but clearly state it on the script.

Date: 2015.12.17 Pass mark: 50% Time: 03 Hours

Question 01: (Compulsory)

(a) Describe the term "E-Commerce" in your terms. (04 Marks)
(b) Briefly explain Four (04) advantages of Electronic Commerce over Traditional Commerce. (08 Marks)
(c) Briefly explain Four (04) possible drawbacks of Electronic Commerce? (08 Marks)

Question 02

(a) Define the term "Business Model". (02 Marks)
(b) How does the "Business Model" differ from "Business Plan". (03 Marks)
(c) Describe five (05) "Revenue Models" used by E-Commerce firms. (15 Marks)

Question 03

(a) Define the term "Supply Chain Management", and explain how does it relate to:
  i. Logistics
  ii. Value Chain concept (12 Marks)
(b) How can information systems support the "Supply Chain"? (08 Marks)

Question 04

Electronic Payment Systems are one of the main components of e-Commerce and the economic and financial infrastructure.

(a) What is an electronic payment system and list four types of electronic payment methods. (04 Marks)

(b) List four limitations of traditional payment systems? (04 Marks)

(c) How these limitations are overcome by electronic payment systems within the context of E-commerce. Explain your answer with appropriate examples. (12 Marks)

Question 05

E-commerce systems are based upon Internet use, which provides open and easy communications on a global basis. The use of the Internet means that your internal IT and e-commerce systems are potentially accessible by anyone, irrespective of their location. However, because the Internet is unregulated, unmanaged and uncontrolled, it poses a wide range of risks and threats to the systems operating on it.

(a) Discuss five security threats exist on E-commerce environment. (15 Marks)

(b) List down five (05) tools available to achieve site security (05 Marks)

Question 06

(a) Explain what you understand by followings,
   i. Extranets
   ii. Intranets (06 Marks)

(b) What are the issues available on current Internet (05 Marks)

(c) Discuss three (03) wireless technologies available on wireless local area networks. (09 Marks)

58

Question 07

(a) Define the term "ethical dilemma" in your words. (04 Marks)

(b) List, and briefly explain the core principles of privacy addressed/ covered by Federal Trade Commission's Fair Information Practice (FTCFIP) principles. (08 Marks)

(c) Describe, with appropriate examples, how individual privacy can be assured during E-Commerce activities. (08 Marks)

Question 08

Using appropriate examples, explain following key concepts. (20 Marks)

(a) EDI

(b) HTTP

(c) Encryption

(d) Extranet

----------END OF THE QUESTION PAPER----------